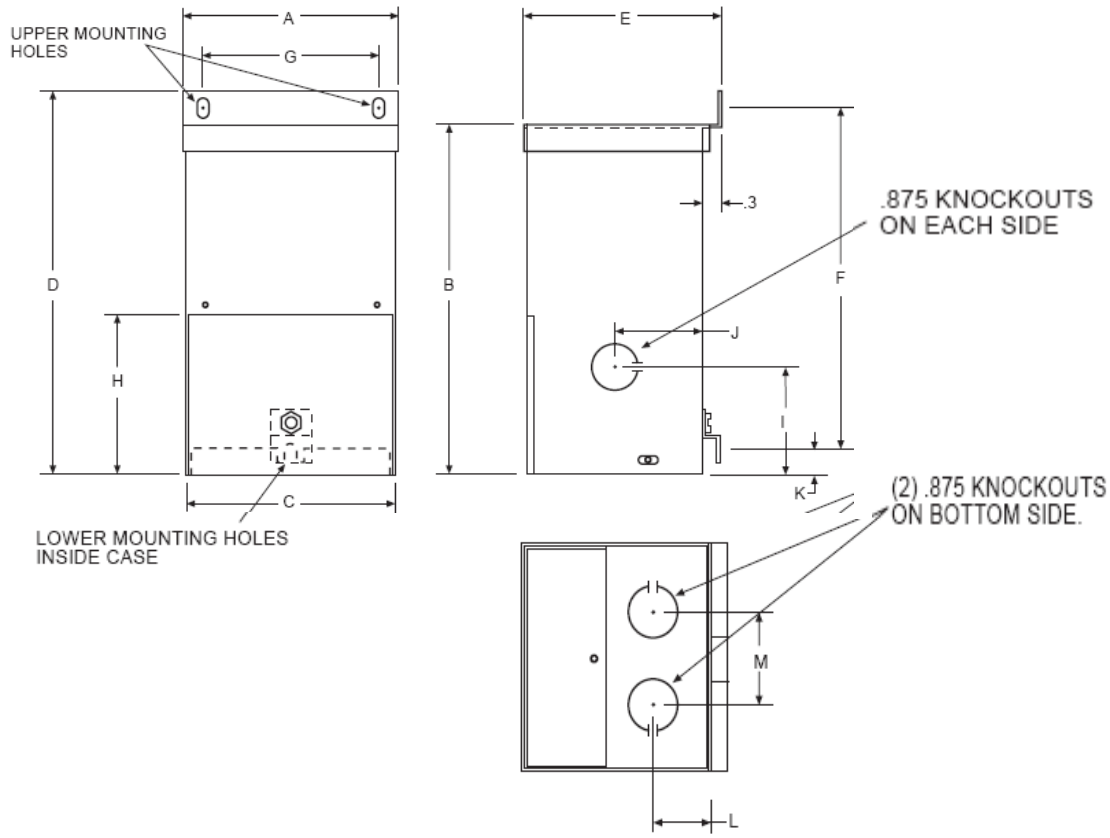

1. MOUNT WITH #10 HARDWARE.

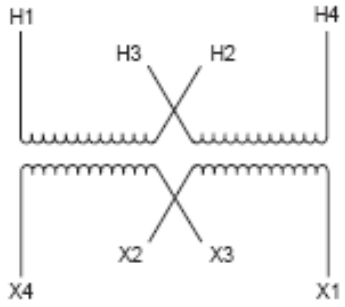

Primary Volts	Connect Primary Lines To	Inter-Connect	Connect Secondary Lines To
480	H1-H4	H2 to H3	
240	H1-H3 & H2-H4		
Secondary Volts			
240		X2 to X3	X1-X4
120/240		X2 to X3	X1-X2-X4
120		X1 to X3 X2 to X4	X1-X4

KVA	CATALOG NUMBER	VOLTAGE		Enclosure Rating	WEIGHT	PHASE	FREQ.
		HIGH	LOW				
.150	**T-1-53006**	240x480	120/240	NEMA 3R	7 Lbs	1ϕ	50/60 Hz

Winding Rise	80°C
Insulation	130°C
Sound Level	40 dB

TYPICAL PERFORMANCE DATA

Regulation @ 100% PF	

IMPEDANCE	

Typical Efficiency	
Full Load Losses	
No Load Losses	

KVA	A	B	C	D	E	F	G	H	I	J	K	L	M
.050	3.25	5.79	3.14	6.41	3.05	5.63	2.50	2.75	2.04	1.36	.48	1.03	1.53
.100-.150	4.00	6.54	3.89	7.16	3.67	6.38	3.25	2.75	2.04	1.67	.48	1.03	1.53

Revisions

Acme Electric®

Type No.

						A	PRINTS TO	CONTROL 7