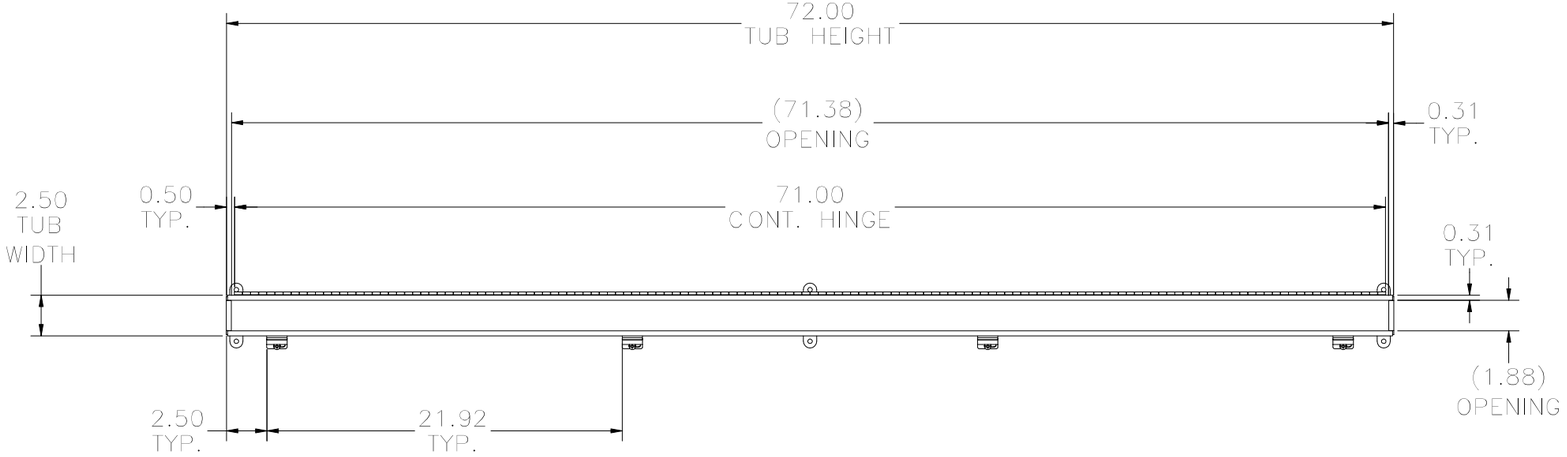

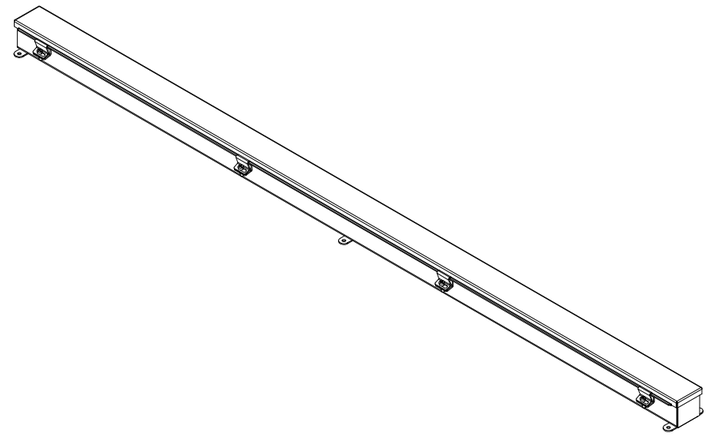

TOP VIEW
(COVER REMOVED)

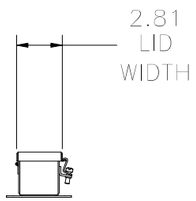

LEFT SIDE VIEW

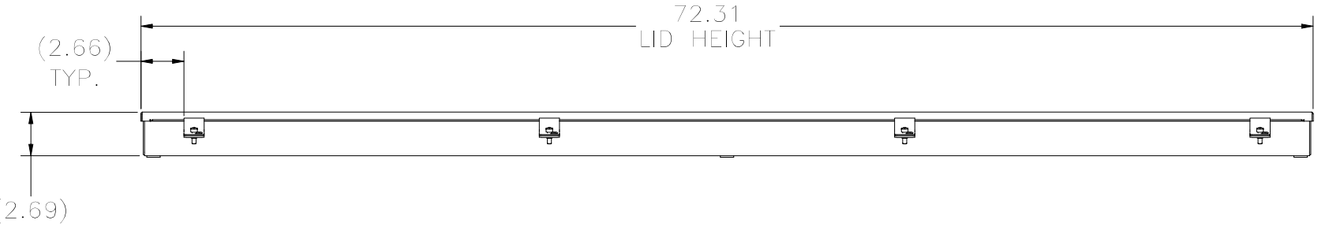

FRONT VIEW

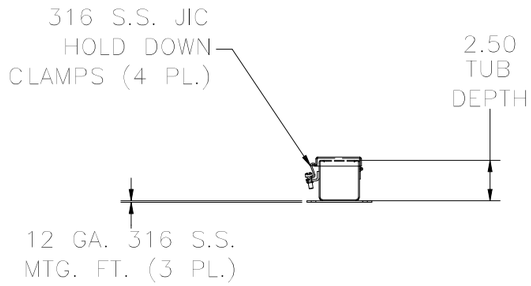

RIGHT SIDE VIEW

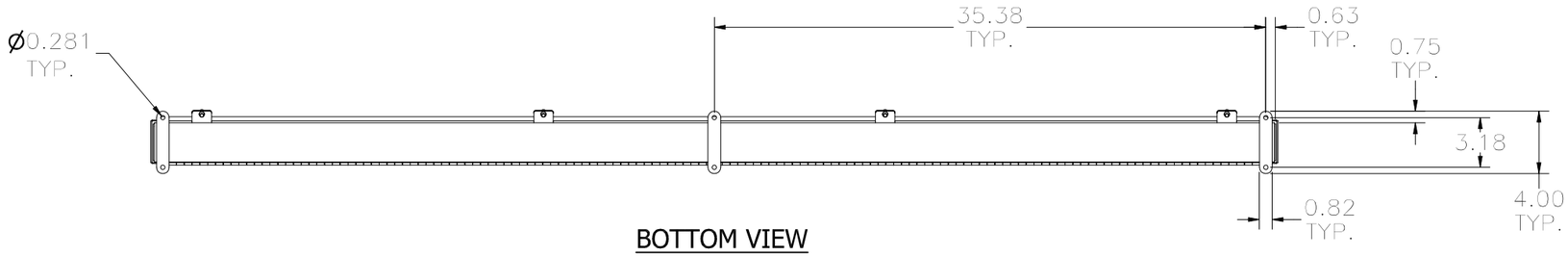

BOTTOM VIEW

PART#: T2272CH
(DATA SUBJECT TO CHANGE WITHOUT NOTICE)

THIS DRAWING IS PROPERTY OF HUBBELL INC. WIEGMANN
ALL INFORMATION IS PROPRIETARY AND NOT TO BE DUPLICATED