SEALMASTER® Rod End Bearings



Basic Construction Type: Female 3 pc. General Purpose, Commercial

Outer Member Material: Carbon Steel with Protective Plating for Corrosion Resistance

Race Material: Bronze

Ball Material: Alloy Steel, Heat Treated, Chrome Plated

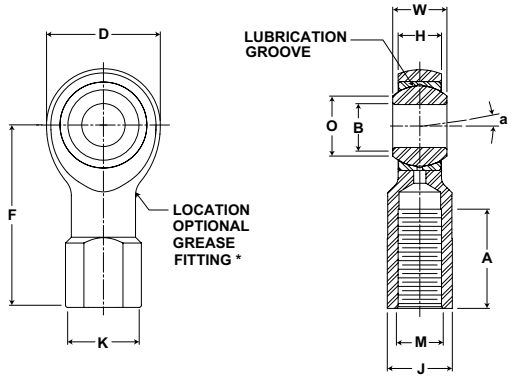

TF, TF-N Series Female Rod Ends

Part No.	Dimensions inch / mm											Max Static Radial Load lb/N	Misalignment Angle a	Unit Wt. lb/kg
	B	W	H	D	F	A	M	K	J	Ball Diam.	O			
	+.0025 -.0005	+.000 -.005	+.010 -.010	+.031 -.031	+.015 -.015	Min.	Class UNF-2B	Ref.	+.010 -.010	Ref.	Ref.		Deg. +/-	
TF-3	.1900	.312	.250	.625	1.062	.531	#10-32	.375	.312	.437	.306	1850	6 1/2	.030
	4.826	7.92	6.35	15.88	26.97	13.49		9.53	7.92	11.10	7.77	8229		.014
TF-4	.2500	.375	.281	.750	1.312	.719	1/4-28	.469	.375	.500	.331	2700	8	.060
	6.350	9.53	7.14	19.05	33.32	18.26		11.91	9.53	12.70	8.41	12010		.027
TF-5	.3125	.437	.344	.875	1.375	.719	5/16-24	.531	.437	.625	.447	3350	7	.080
	7.938	11.10	8.74	22.23	34.93	18.26		13.49	11.10	15.88	11.35	14902		.036
TF-6	.3750	.500	.406	1.000	1.625	.906	3/8-24	.688	.562	.718	.517	4450	6	.140
	9.525	12.70	10.31	25.40	41.28	23.01		17.48	14.27	18.24	13.13	19795		.064
TF-7	.4375	.562	.437	1.125	1.812	1.031	7/16-20	.750	.625	.812	.586	5350	7	.180
	11.113	14.27	11.10	28.58	46.02	26.19		19.05	15.88	20.62	14.88	23798		.082
TF-8	.5000	.625	.500	1.312	2.125	1.156	1/2-20	.875	.750	.937	.698	7400	6	.290
	12.700	15.88	12.70	33.32	53.98	29.36		22.23	19.05	23.80	17.73	32917		.132
TF-10	.6250	.750	.562	1.500	2.500	1.469	5/8-18	1.000	.875	1.125	.839	8050	8	.430
	15.875	19.05	14.27	38.10	63.50	37.31		25.40	22.23	28.58	21.31	35808		.195
TF-12	.7500	.875	.687	1.750	2.875	1.719	3/4-16	1.125	1.000	1.312	.978	11300	7	.640
	19.050	22.23	17.45	44.45	73.03	43.66		28.58	25.40	33.32	24.84	50265		.290

NOTES
1. Rod ends with Zerk type grease fittings can be obtained by ordering the TF-N series; Example: TF-8N.
2. Grease fittings are available on sizes 4 through 12 only.
*3. Load ratings apply to the TF series only. For TF-N load ratings contact Application Engineering.
4. To order left hand threaded units add letter “L” to part number prefix; Example: TFL-8.
5. Add letter “Y” to the part number suffix to indicate stud; Example: TF-8Y.
6. For design modifications, see page J-13.

Metric dimensions for reference only.
Not all parts are available from stock. Please contact customer service for availability (800) 626-2120.
For more information on bearing capabilities outside of our standard offering, please contact Application Engineering (800) 626-2093.