Tel +1 (717) 767-6511
Fax +1 (717) 764-0839
www.redlion.net

Bulletin No. TMPC/U/B-C
Drawing No. LP0721
Released 06/13

MODELS TMPC, TMPU, & TMPB THERMOCOUPLES

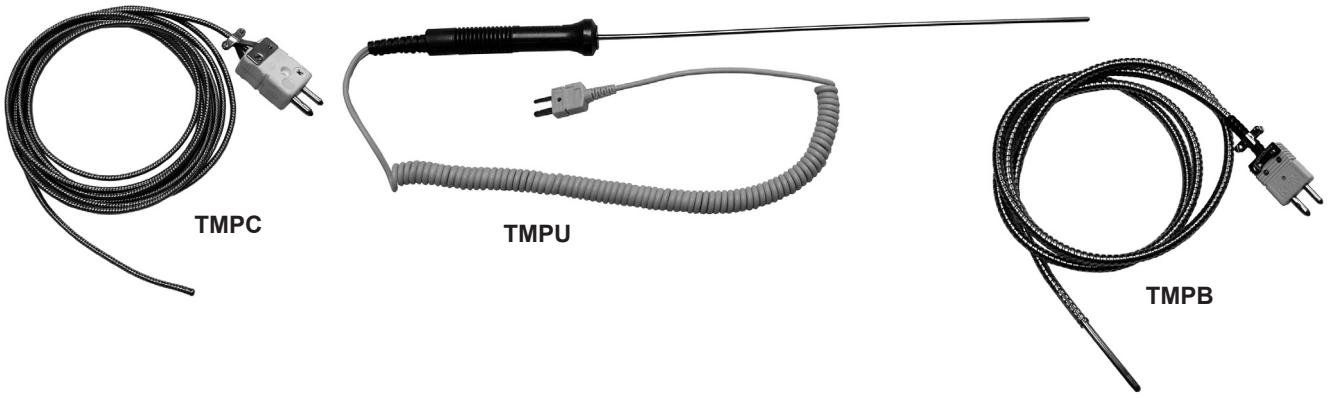

MODEL TMPC - HIGH TEMPERATURE THERMOCOUPLE

GENERAL DESCRIPTION

The model TMPC thermocouple is double-protected with abrasion resistant Inconel overbraid with high temperature ceramic fiber insulation. A temperature rating of up to 980 ºC (1796 ºF) continuous service and 1090 ºC (1994 ºF) short-term service makes these probes ideal for many high temperature measurement applications. Ideal applications include profiling ovens and furnaces.

- *Flexible and Abrasion Resistant*
- *Smooth, rounded tip on "hot" side*
- *Male high temperature standard size ceramic connector on "cold" side*

DIMENSIONS In inches (mm)

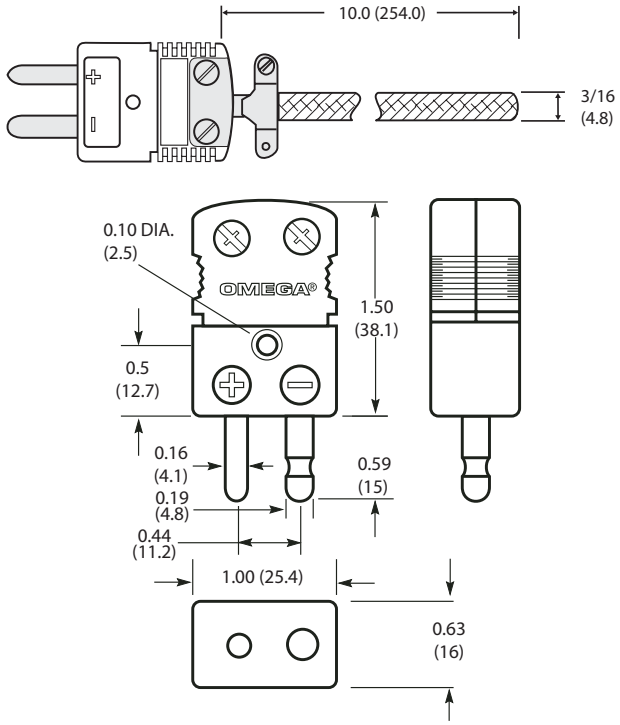

SPECIFICATIONS

1. **WIRE**: 20 AWG, 10 feet in length; standard limits of error
2. **INSULATION**: Nextel® ceramic fiber. (Not to be exported) *
3. **TEMPERATURE**: 980 ºC (1796 ºF) continuous
   1090 ºC (1994 ºF) short-term service depending on TC type
4. **CONNECTOR**: High temperature ceramic standard size style connector -29 to 650 ºC (-20 to 1202 ºF)
5. **PROBE**: Grounded TC junction with Inconel overbraid welded to form a smooth, round tip

ORDERING INFORMATION

MODEL NO.	DESCRIPTION	PART NUMBER
TMPC	Type K OVERBRAIDED CERAMIC TC	TMPKCF01

** Nextel can not be exported. Consult factory for available options.*

Do not dispose of unit in trash - Recycle

MODEL TMPU - UTILITY THERMOCOUPLES

GENERAL DESCRIPTION

Utility thermocouple probes are basic products for temperature measurement. They are typically connected to a hand held thermometer. The unit features a rugged handle that is permanently molded to a probe sheath. A retractable cable is connected with strain relief to the handle end, and termination is provided by a miniature male connector.

- *RETRACTABLE CABLE WITH SUPERIOR MEMORY*
- *MINIATURE CONNECTOR FOR USE WITH HAND HELD THERMOMETERS*
- *MOLDED HANDLE RATED TO 220 ºC (428 ºF)*
- *MEETS OR EXCEEDS SLE AND EN 60584-2: TOLERANCE CLASS 1*

DIMENSIONS In inches (mm)

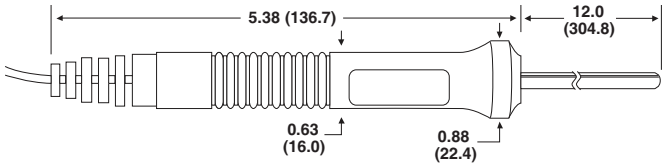

* For connector information see the TMPCNM01 bulletin.

SPECIFICATIONS

1. **HANDLE TEMPERATURE RATING**: 220 ºC (428 ºF)
2. **THERMOCOUPLE JUNCTION**: Grounded
3. **CABLE LENGTH**: 1 foot, expands to 5 feet
4. **PROBE LENGTH**: 12 inches
5. **MAX PROBE TEMPERATURE**:
   304SS: 900 °C (1652 °F)
   Inconel: 1150 °C (2102 °F)

ORDERING INFORMATION

MODEL NUMBER	DESCRIPTION	TC ANSI TYPE	SHEATH MATERIAL	SHEATH DIAMETER	CABLE LENGTH	TC JUNCTION	PART NUMBER
TMPU	TC HANDLE PROBE	K	304 SS	.125	1' EXPANDS TO 5'	GROUNDED	TMPKUT01
	TC HANDLE PROBE	K	INCONEL 600	.125	1' EXPANDS TO 5'	GROUNDED	TMPKUT02

Do not dispose of unit in trash - Recycle

MODEL TMPB - SPRING LOADED COMPRESSION FITTING THERMOCOUPLES

GENERAL DESCRIPTION

The spring-loaded compression fitting thermocouple is ideally suited for measuring plastic processing machinery temperatures at the crosshead, die or barrel. It has a 5 foot stainless steel cable, with a 3/16" sheath diameter and a brass compression fitting with 1/8" NPT.

- *IDEAL FOR EXTRUDERS/MOLDING AND MACHINE PROCESS TEMPERATURE*
- *COLD END TERMINATION IS HIGH TEMPERATURE NICKEL ZINC FERRITE CORE STANDARD MALE CONNECTOR*
- *STANDARD MALE CONNECTOR IS DESIGNED FOR SUPPRESSION OF ELECTROMAGNETIC INTERFERENCE*

DIMENSIONS In inches (mm)

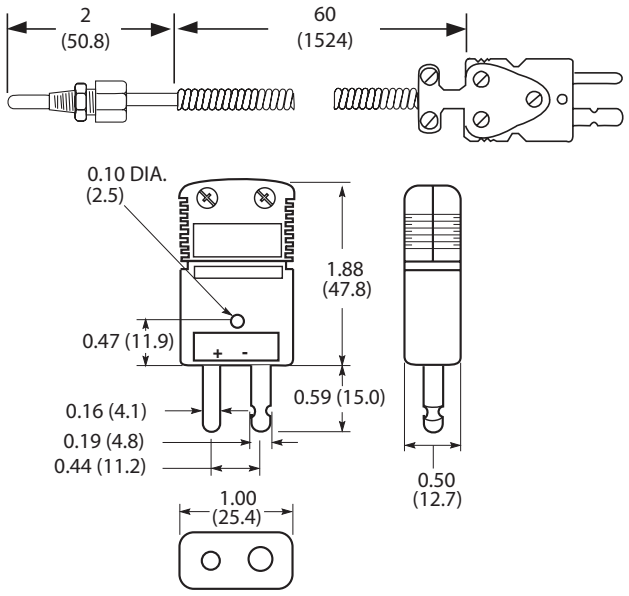

SPECIFICATIONS

1. **THERMOCOUPLE JUNCTION**: Type K, grounded
2. **CABLE**: 5 feet, 0.188 dia. stainless steel
3. **CONNECTOR SPECIFICATIONS**: Extra heavy duty solid male pin male connector
   Case Material: High temperature liquid crystal polymer (LCP)
   Temperature ratings:
   Ferrite core effectiveness: 120º C (248º F)
   LCP Material: 260º C (500º F)
   Impedance: (±20%): 35 ohms @ 25 MHz
   70 ohms @ 100 MHz

ORDERING INFORMATION

MODEL NUMBER	DESCRIPTION	PART NUMBER
TMPB	COMPRESSION TC ASSEMBLY	TMPKBT01

Do not dispose of unit in trash - Recycle