



Rolling Elements: Spherical Roller
Housing: Ductile Iron Flange Bracket
Self Alignment: +/- 2 Degrees
Lock: Setscrew
Seal: Felt
Optional Seal: Double Lip Contact
Temperature: -20° to 220° F

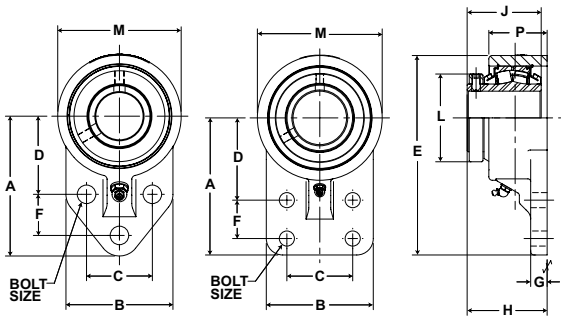

USBF5000 Series Three-Bolt Flange Brackets - Collar Mount

Bore Diameter inch	Part No.	Basic Dynamic Rating lb/N	Dimensions inch / mm													Unit Wt. lb/kg
			A	B	C	D	E	F	G	H *	J	L	M	P	Bolt Size	
1 7/16	USBF5000-107	20368 90597	4 1/4 108.0	3 1/4 82.6	2 50.8	2 3/8 60.3	6 1/8 155.6	1 1/4 31.8	5/8 15.9	2 53/64 71.8	2 3/4 69.9	2 49/64 70.2	3 3/4 95.3	2 1/4 57.2	1/2	6.4 2.91
1 15/16	USBF5000-115	23520 104617	5 3/16 131.8	4 101.6	2 3/4 69.9	2 15/16 74.6	7 5/16 185.7	1 5/8 41.3	11/16 17.5	2 31/32 75.4	2 7/8 73.0	3 76.2	4 1/4 108.0	2 3/8 60.3	1/2	7.5 3.41

USBF5000 Series Four-Bolt Flange Brackets - Collar Mount

Bore Diameter inch	Part No.	Basic Dynamic Rating lb/N	Dimensions inch / mm													Unit Wt. lb/kg
			A	B	C	D	E	F	G	H *	J	L	M	P	Bolt Size	
2 7/16	USBFF5000-207	44691 198786	6 1/4 158.8	4 7/8 123.8	3 76.2	3 3/4 95.3	9 3/32 231.0	1 3/4 44.5	3/4 19.1	3 31/64 88.5	3 3/8 85.7	4 101.6	5 11/16 144.5	2 21/32 67.5	5/8	16.6 7.55

*For expansion bearings, this dimension can increase by the corresponding value in table VIII on page I-69.

Metric dimensions for reference only.
Not all parts are available from stock. Please contact customer service for availability (800) 626-2120.
For more information on bearing capabilities outside of our standard offering, please contact Application Engineering (800) 626-2093.