



Rolling Elements: Spherical Roller
Housing: Ductile Iron Flange Bracket
Self Alignment: +/- 2 Degrees
Lock: Setscrew
Seal: Felt
Optional Seal: Double Lip Contact
Temperature: -20° to 220° F

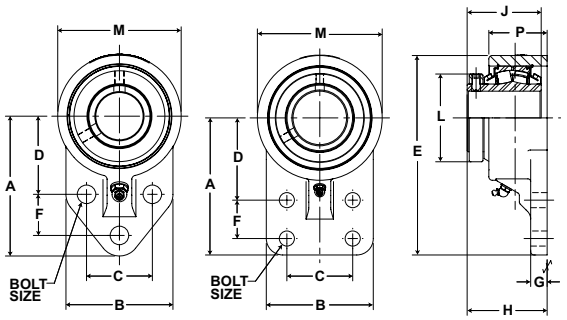

USBF5000 Series Three-Bolt Flange Brackets - Collar Mount

Bore Diameter inch	Part No.	Basic Dynamic Rating lb/N	Dimensions inch / mm													Unit Wt. lb/kg
			A	B	C	D	E	F	G	H *	J	L	M	P	Bolt Size	
1 7/16	USBF5000-107	20368 90597	4 1/4 108.0	3 1/4 82.6	2 50.8	2 3/8 60.3	6 1/8 155.6	1 1/4 31.8	5/8 15.9	2 53/64 71.8	2 3/4 69.9	2 49/64 70.2	3 3/4 95.3	2 1/4 57.2	1/2	6.4 2.91
1 15/16	USBF5000-115	23520 104617	5 3/16 131.8	4 101.6	2 3/4 69.9	2 15/16 74.6	7 5/16 185.7	1 5/8 41.3	11/16 17.5	2 31/32 75.4	2 7/8 73.0	3 76.2	4 1/4 108.0	2 3/8 60.3	1/2	7.5 3.41

USBF5000 Series Four-Bolt Flange Brackets - Collar Mount

Bore Diameter inch	Part No.	Basic Dynamic Rating lb/N	Dimensions inch / mm													Unit Wt. lb/kg
			A	B	C	D	E	F	G	H *	J	L	M	P	Bolt Size	
2 7/16	USBFF5000-207	44691 198786	6 1/4 158.8	4 7/8 123.8	3 76.2	3 3/4 95.3	9 3/32 231.0	1 3/4 44.5	3/4 19.1	3 31/64 88.5	3 3/8 85.7	4 101.6	5 11/16 144.5	2 21/32 67.5	5/8	16.6 7.55

*For expansion bearings, this dimension can increase by the corresponding value in table VIII on page I-69.

Metric dimensions for reference only.
Not all parts are available from stock. Please contact customer service for availability (800) 626-2120.
For more information on bearing capabilities outside of our standard offering, please contact Application Engineering (800) 626-2093.

Installation Instructions continued



Alternate Lubrication Procedure:

Stop rotating equipment. Add one half the recommended amount shown in Table V. Start the bearing and run for a few minutes. Stop the bearing and add the second half of the recommended amount. A temperature rise after lubrication, sometimes 30°F (17°C), is normal. Bearing should operate at temperatures less than 200°F (94°C) and should not exceed 250° (121°C) for intermittent operation. For lubrication guidelines, see Table VI.

Note: Table VI are general recommendations. Experience and testing may be required for specific applications.

Note: Grease charges in Table V are based on the use of lithium complex thickened grease with a NLGI grade 2 consistency.

Expansion Bearing Applications:

Before installation, make certain proper expansion is accounted for. Expansion units should be placed in a location where relative movement between the bearing insert and the housing can be tolerated. For most applications using expansion type units, the fixed unit (non-expansion unit) is placed at the drive end of the shaft. Use Table VIII to review the total available bearing expansion. If the application requires additional expansion, consult Application Engineering.

NOTICE: One expansion unit is to be used in conjunction with one non-expansion unit for applications using adapter lock units. Failure to utilize one expansion and one non-expansion unit is likely to result in reduced bearing performance.

Table V

Grease Charge for Relubrication	
Bore Size	**Grease Charge (Mass - Ounces)**
1 1/8 - 1 1/2	0.20
1 11/16 - 1 3/4	0.20
1 15/16 - 2	0.25
2 3/16	0.40
2 7/16 - 2 1/2	0.60
2 11/16 - 3	0.75
3 3/16 - 3 1/2	1.25
3 11/16 - 4	2.00
4 7/16 - 4 1/2	2.75
4 15/16 - 5	4.00

Table VI

Relubrication Recommendations			
Environment	**Temperature (°F)**	**Speed (% Catalog Max)**	**Frequency**
Dirty	-20 to 250	0 - 100%	Daily to 1 Week
Clean	-20 to 125	0 - 25%	4 to 10 Months
		26 - 50%	1 to 4 Months
		51 - 75%	1 Week to 1 Month
		76 - 100%	Daily to 1 Week
	125 to 175	0 - 25%	2 to 6 Weeks
		26 - 50%	1 Week to 1 Month
		51 - 75%	Daily to 1 Week
		76 - 100%	
	175 to 250	0 - 100%	Daily to 1 Week

Table VII

Maximum Operational Speed		
Bore Size	**Felt Seal (RPM)**	**Contact Seal (RPM)**
1 1/8 - 1 1/2	4000	3000
1 11/16 - 1 3/4	4000	2750
1 15/16 - 2	4000	2500
2 3/16	3750	2200
2 7/16 - 2 1/2	3250	1750
2 11/16 - 3	3000	1600
3 3/16 - 3 1/2	2500	1350
3 11/16 - 4	2250	1200
4 7/16 - 4 1/2	2000	1100
4 15/16 - 5	1750	900

Table VIII

Total Available Housing Expansion (inch)		
Bore Size	**Setscrew**	**Adapter Lock**
1 1/8 - 1 1/2	3/16	5/32
1 11/16 - 3 1/2	1/4	7/32
3 11/16 - 4	5/16	1/4
4 7/16 - 5	3/8	9/32