

Rolling Elements: Spherical Roller

Housing: Cast Iron Four Bolt Pillow Block

Self Alignment: +/- 2 Degrees

Lock: Adapter

Seal: Felt

Optional Seal: Double Lip Contact

Temperature: -20° to 220° F

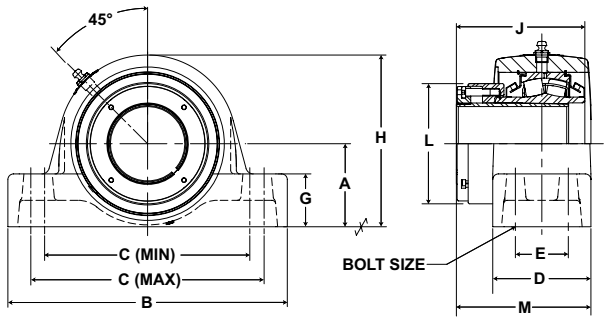

USRBF5000A Series Four-Bolt Base Pillow Blocks - Adapter Mount

Bore Diameter inch	Part No.	Basic Dynamic Rating lb/N	Dimensions inch / mm												Unit Wt. lb/kg
			A	B	C Min.	C Max.	D	E	G	H	J	L	M *	Bolt Size	
2 7/16	USRBF5000A-207	44691	2 3/4	9 1/4	6 7/8	7 5/8	3 1/4	1 3/4	1 3/4	5 11/16	4 5/16	3 63/64	4 39/64	1/2	18.5
2 1/2	USRBF5000A-208	198786	69.9	235.0	174.6	193.7	82.6	44.5	44.5	144.5	109.5	101.2	117.1		8.42
2 11/16	USRBF5000A-211														
2 3/4	USRBF5000A-212	47447	3 1/4	10 7/16	7 7/8	8 3/8	3 3/4	1 7/8	2 1/4	6 7/16	4 31/64	4 25/64	4 29/32	5/8	26.4
2 15/16	USRBF5000A-215	211044	82.6	265.1	200.0	212.7	95.3	47.6	57.2	163.5	113.9	111.5	124.6		12.02
3	USRBF5000A-300														
3 3/16	USRBF5000A-303														
3 7/16	USRBF5000A-307	72640 323103	3 3/4	13	9 1/4	10 3/4	3 7/8	2	2 1/4	7 1/2	5 35/64	5 15/32	5 11/16	3/4	41.0
3 1/2	USRBF5000A-308		95.3	330.2	235.0	273.1	98.4	50.8	57.2	190.5	140.9	138.9	144.5		18.63
3 11/16	USRBF5000A-311														
3 15/16	USRBF5000A-315	96050 427230	4 1/4	15 1/4	11	13	4 1/2	2 1/4	2 5/8	8 9/16	5 15/16	5 13/16	6 13/64	3/4	58.2
4	USRBF5000A-400		108.0	387.4	279.4	330.2	114.3	57.2	66.7	217.5	150.8	147.6	157.6		26.47
4 7/16	USRB5000A-407	111537	4 3/4	16 1/16	13	14	4 5/8	2 1/2	2 3/4	9 3/8	6 27/64	6 11/32	6 31/64	3/4	68.2
4 1/2	USRB5000A-408	496117	120.7	408.0	330.2	355.6	117.5	63.5	69.9	238.1	163.1	161.1	164.7		31.01
4 15/16	USRB5000A-415	158816	5 1/2	18 1/2	15	16	5 1/8	2 3/4	3	10 7/8	7 1/8	7 13/64	7 3/32	7/8	107.8
5	USRB5000A-500	706414	139.7	469.9	381.0	406.4	130.2	69.9	76.2	276.2	181.0	183.0	180.2		48.99

*For expansion bearings, this dimension can increase by the corresponding value in table VIII on page I-69.
One expansion unit is to be used in conjunction with one non-expansion unit for applications using an adapter lock unit
Failure to utilize one expansion and one non-expansion unit is likely to result in reduced bearing performance.