

Rolling Elements: Spherical Roller

Housing: Ductile Iron Two Bolt Pillow Block

Self Alignment: +/- 2 Degrees

Lock: Setscrew

Seal: Felt

Optional Seal: Double Lip Contact

Temperature: -20° to 220° F

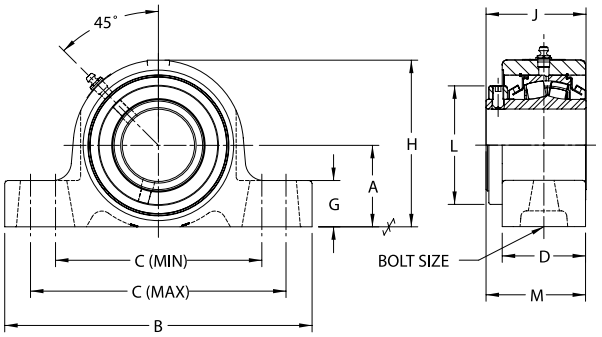

USRBE5000 Series Two-Bolt Base Pillow Blocks - Collar Mount, Type E Mounting Dimensions

Bore Diameter	Part No.	Basic Dynamic Rating	Dimensions inch / mm											Unit Wt.
			A	B	C		D	G	H	J	L	M *	Bolt Size	
inch		lb/N			Min.	Max.								lb/kg
1 15/16	USRBE5000-115	23520	2 1/4	8 7/8	6	7 1/8	2 7/16	1 5/16	4 17/32	2 7/8	3	2 63/64	5/8	11.4
2	USRBE5000-200	104617	57.2	225.4	152.4	181.0	61.9	33.3	115.1	73.0	76.2	75.8		5.18
2 3/16	USRBE5000-203	28087 124931	2 1/2 63.5	9 5/8 244.5	6 1/2 165.1	7 7/8 200.0	2 1/2 63.5	1 7/16 36.5	4 31/32 126.2	3 1/8 79.4	3 1/4 82.6	3 1/8 79.4	5/8	13.7 6.21
2 7/16	USRBE5000-207	44691	2 3/4	10 3/8	6 7/8	8 5/8	2 13/16	1 9/16	5 5/8	3 3/8	4	3 11/32	5/8	19.4
2 1/2	USRBE5000-208	198786	69.9	263.5	174.6	219.1	71.4	39.7	142.9	85.7	101.6	84.5		8.82
2 11/16	USRBE5000-211													
2 3/4	USRBE5000-212	47447	3 1/8	11 5/8	7 7/8	9 5/8	2 5/8	1 5/8	6 1/16	3 7/8	4 17/32	3 11/16	3/4	22.3
2 15/16	USRBE5000-215	211044	79.4	295.3	200.0	244.5	66.7	41.3	154.0	98.4	115.1	93.7		10.14
3	USRBE5000-300													
3 3/16	USRBE5000-303													
3 7/16	USRBE5000-307	72640 323103	3 3/4 95.3	13 1/2 342.9	9 3/8 238.1	11 1/4 285.8	3 1/8 79.4	2 1/16 52.4	7 3/8 187.3	4 15/32 113.5	5 5/16 134.9	4 7/32 107.2	7/8	38.8 17.62
3 1/2	USRBE5000-308													
3 11/16	USRBE5000-311													
3 15/16	USRBE5000-315	96050 427230	4 1/8 104.8	14 1/4 362.0	10 254.0	11 3/4 298.5	3 9/16 90.5	2 1/4 57.2	8 1/2 215.9	4 15/16 125.4	6 152.4	4 23/32 119.9	1	55.4 25.19
4	USRBE5000-400													

*For expansion bearings, this dimension can increase by the corresponding value in table VIII on page I-69.

Metric dimensions for reference only.
Not all parts are available from stock. Please contact customer service for availability (800) 626-2120.
For more information on bearing capabilities outside of our standard offering, please contact Application Engineering (800) 626-2093.