BALDOR • RELIANCE

Product Information Packet

VEBM3710T

7.5HP,1770RPM,3PH,60HZ,213TC,3738M,TEFC

Copyright © All product information within this document is subject to ABB Motors and Mechanical Inc. copyright © protection, unless otherwise noted.

Part Detail

Revision:	A	**Status:**	PRD/A	**Change #:**		**Proprietary:**	No
Type:	AC	**Elec. Spec:**	37WGR872	**CD Diagram:**	CD0005	**Mfg Plant:**	
Mech. Spec:	37F721	**Layout:**	37LYF721	**Poles:**	04	**Created Date:**	12-07-2015
Base:	N	**Eff. Date:**	08-22-2017	**Leads:**	9#14		

Specs

Catalog Number:	VEBM3710T	**Insulation Class:**	F
Enclosure:	TEFC	**Inverter Code:**	Inverter Ready
Frame:	213TC	**KVA Code:**	J
Frame Material:	Steel	**Lifting Lugs:**	Standard Lifting Lugs
Output @ Frequency:	7.500 HP @ 60 HZ	**Locked Bearing Indicator:**	Locked Bearing
Synchronous Speed @ Frequency:	1800 RPM @ 60 HZ	**Motor Lead Quantity/Wire Size:**	9 @ 14 AWG
Voltage @ Frequency:	460.0 V @ 60 HZ	**Motor Lead Exit:**	Ko Box
	230.0 V @ 60 HZ	**Motor Lead Termination:**	Flying Leads
XP Class and Group:	None	**Motor Type:**	3738M
XP Division:	Not Applicable	**Mounting Arrangement:**	F1
Agency Approvals:	CSA	**Power Factor:**	80
	CSA EEV	**Product Family:**	General Purpose
	UR	**Product Type:**	BRAKE MOTOR
Auxillary Box:	No Auxillary Box	**Pulley End Bearing Type:**	Ball
Auxillary Box Lead Termination:	None	**Pulley Face Code:**	C-Face
Base Indicator:	No Mounting	**Pulley Shaft Indicator:**	Standard
Bearing Grease Type:	Polyrex EM (-20F +300F)	**Rodent Screen:**	None
Blower:	None	**RoHS Status:**	ROHS COMPLIANT

Current @ Voltage:	19.000 A @ 230.0 V
	20.000 A @ 208.0 V
	9.500 A @ 460.0 V
Design Code:	A
Drip Cover:	No Drip Cover
Duty Rating:	CONT
Electrically Isolated Bearing:	Not Electrically Isolated
Feedback Device:	NO FEEDBACK
Front Face Code:	Brake Mounting
Front Shaft Indicator:	None
Heater Indicator:	No Heater

Shaft Extension Location:	Pulley End
Shaft Ground Indicator:	No Shaft Grounding
Shaft Rotation:	Reversible
Shaft Slinger Indicator:	No Slinger
Speed Code:	Single Speed
Motor Standards:	NEMA
Starting Method:	Direct on line
Thermal Device - Bearing:	NONE (OLD)
Thermal Device - Winding:	None
Vibration Sensor Indicator:	No Vibration Sensor
Winding Thermal 1:	None
Winding Thermal 2:	None

Nameplate NP1259L

CAT.NO.	VEBM3710T								
SPEC.	37F721R872G1								
HP	7.5								
VOLTS	230/460								
AMP	19/9.5								
RPM	1770								
FRAME	213TC		**HZ**	60			**PH**	3	
SER.F.	1.15	**CODE**	J	**DES**	A	**CL**	F		
NEMA-NOM-EFF	91.7	**PF**	80						
RATING	40C AMB-CONT								
CC	010A					**USABLE AT 208V**	20		
DE	6307			**ODE**	6306				
ENCL	TEFC	**SN**							

Parts List

Part Number	Description	Quantity
SA311426	SA 37F721R872G1	1.000 EA
RA298851	RA 37F721R872G1	1.000 EA
HW3200A01	3/8-16X3/4 I-BLT WELDED F/S	1.000 EA
37CB3000SP	CONDUIT BOX, CAST, W/1.089/1.100 CAST LE	1.000 EA
37GS1000SP	GASKET, CONDUIT BOX STD., .06 THICK LEXI	1.000 EA
51XW2520A12	.25-20 X .75, TAPTITE II, HEX WSHR SLTD	2.000 EA
11XW1032G06	10-32 X .38, TAPTITE II, HEX WSHR SLTD U	1.000 EA
HW3001B01	BRASS CUP WASHER, FOR #10 SCREW	1.000 EA
37EP1301A97	STD FACE MTD ENDPLATE, BRAKE MTG	1.000 EA
HW4500A01	1641B(ALEMITE)400 UNIV, GREASE FITT	1.000 EA
HW5100A07	W2816-030 WVY WASHER (WB)	1.000 EA
37PE3300A01	PUEP ASSEMBLY FOR ROUTING	1.000 EA
HW4500A01	1641B(ALEMITE)400 UNIV, GREASE FITT	1.000 EA
10XN2520A30	HEX HD CAP SCREW-STD THD-.25 X 20 THD PE	4.000 EA
HW1001A25	LOCKWASHER 1/4, ZINC PLT .493 OD, .255 I	4.000 EA
XY3118A12	5/16-18 HEX NUT DIRECTIONAL SERRATION	4.000 EA
84XN5013L12	.50-13 X .75 NYLOK TYPE HEX.SOC.HD.CAP S	4.000 EA
HW2501E10	KEY, 1/4 SQ X 1.000	1.000 EA
37FN5001A01SP	EXFN ASSY, BALTRIC, 8.50 OD, .986 ID	1.000 EA
80XN2520A06	1/4-20 X 3/8 SET SCREW	1.000 EA
37FH5007	W/FINGER GUARDS	1.000 EA
51XW1032A06	10-32 X .38, TAPTITE II, HEX WSHR SLTD S	3.000 EA
36CB4516	36 LIPPED CB LID - GALVANNEAL	1.000 EA
37GS1001SP	GASKET, CONDUIT BOX LID, .06 THICK LEXID	1.000 EA

Parts List (continued)

Part Number	Description	Quantity
51XW0832A07	8-32 X .44, TAPTITE II, HEX WSHR SLTD SE	4.000 EA
HW2501F21	KEY, 5/16 SQ X 2.375	1.000 EA
HA7000A02	KEY RETAINER RING, 1 1/8 DIA, 1 3/8 DIA	1.000 EA
85XU0407S04	4X1/4 U DRIVE PIN STAINLESS	2.000 EA
LB1115N	LABEL,LIFTING DEVICE (ON ROLLS)	1.000 EA
MJ1000A02	GREASE, POLYREX EM EXXON (USe 4824-15A)	0.050 LB
MG1000Y03	MUNSELL 2.53Y 6.70/ 4.60, GLOSS 20,	0.028 GA
HA3104A17	5/16-18X13.250 T-BLT/OHIO	4.000 EA
87BK4120EQF	35LB-FT 230/460V STD BK W/SIDE RELEASE L	1.000 EA
LC0005E01	CONN.DIA./WARNING LABEL (LC0005/LB1119N)	1.000 EA
LB1404	BRAKE CONNECTION LABEL	1.000 EA
NP1259L	ALUM SUPER-E UL CSA-EEV CC NEMA PREMIUM	1.000 EA
37PA1039	PALLET PACK GROUP, BLANK PK1148	1.000 EA
PK3082	STYROFOAM CRADLE	1.000 EA
MN416A01	TAG-INSTAL-MAINT no wire (1200/bx) 5/18	1.000 EA

AC Induction Motor Performance Data

Record # 54275 - Typical performance - not guaranteed values

Winding: 37WGR872-R001	**Type:** 3738M	**Enclosure:** TEFC

Nameplate Data				460 V, 60 Hz: High Voltage Connection	
Rated Output (HP)	7.5			Full Load Torque	22.2 LB-FT
Volts	230/460			Start Configuration	direct on line
Full Load Amps	19/9.5			Breakdown Torque	70.9 LB-FT
R.P.M.	1770			Pull-up Torque	32.6 LB-FT
Hz	60	Phase	3	Locked-rotor Torque	43 LB-FT
NEMA Design Code	A	KVA Code	J	Starting Current	70.9 A
Service Factor (S.F.)	1.15			No-load Current	4.31 A
NEMA Nom. Eff.	91.7	Power Factor	80	Line-line Res. @ 25ºC	1.41 Ω
Rating - Duty	40C AMB-CONT			Temp. Rise @ Rated Load	63°C
S.F. Amps				Temp. Rise @ S.F. Load	77°C
				Locked-rotor Power Factor	37.2
				Rotor inertia	0.934 LB-FT2

Load Characteristics 460 V, 60 Hz, 7.5 HP

% of Rated Load	25	50	75	100	125	150	S.F.
Power Factor	42	64	75	80	83	84	82
Efficiency	87.1	91.6	92	92	91.1	89.8	91.5
Speed	1793	1786	1778	1770	1760	1750	1764
Line amperes	4.83	6.02	7.6	9.5	11.6	13.9	10.8

Performance Graph at 460V, 60Hz, 7.5HP Typical performance - Not guaranteed values

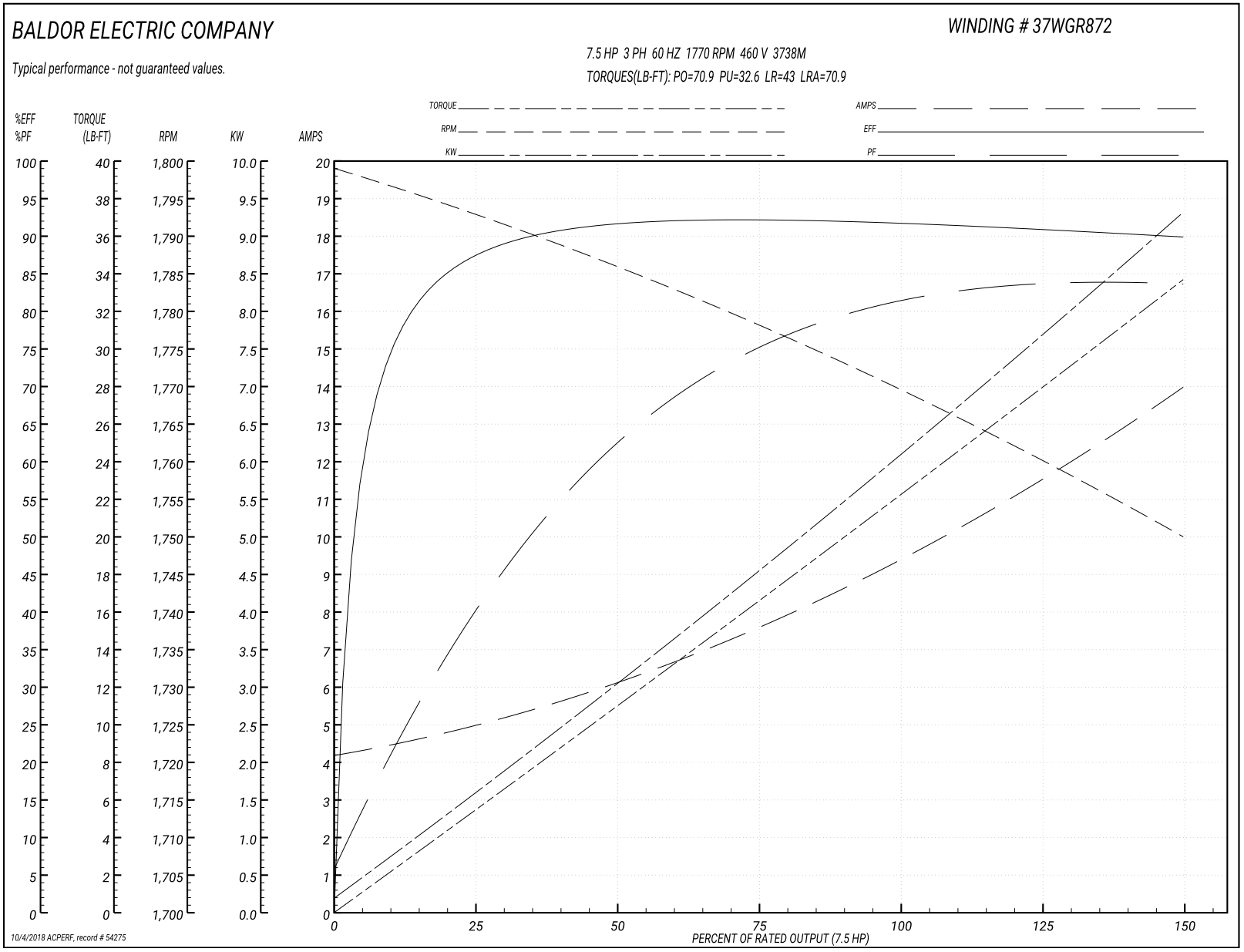

37LYF721

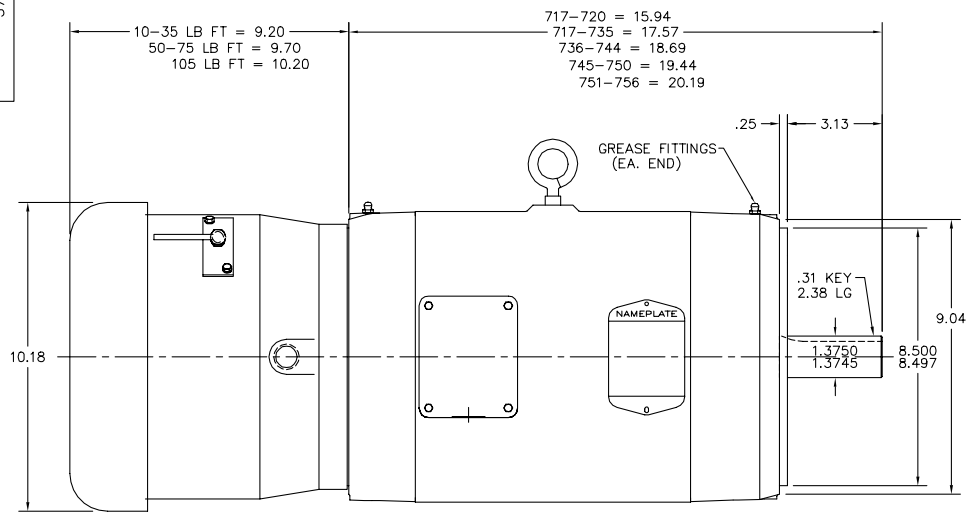

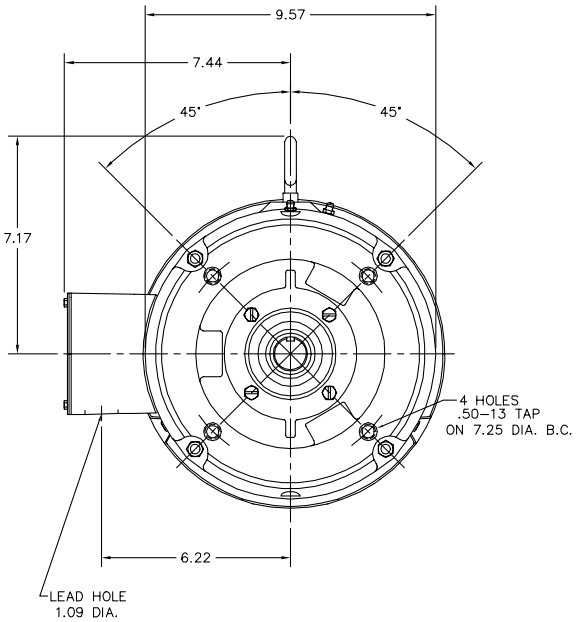

37LYF721

CUSTOMER IS RESPONSIBLE FOR DETERMINING THAT BALDOR'S PRODUCT WILL PERFORM SUITABLY IN THE INTENDED APPLICATION.

REV. DESC: MOVE FAN HOUSE .06 TOWARD MOTOR		
REV. LTR: B	VERSION: 01	TDR: 000000872188
FILE: \AAA\00080\000	REVISED: 02:40:54 09/18/2014	BY: ENKANVO
MTL: –		

BALDOR

VERT 213–5TC TEFC 37M W/BRAKE

SH 1 of 1

CD0005

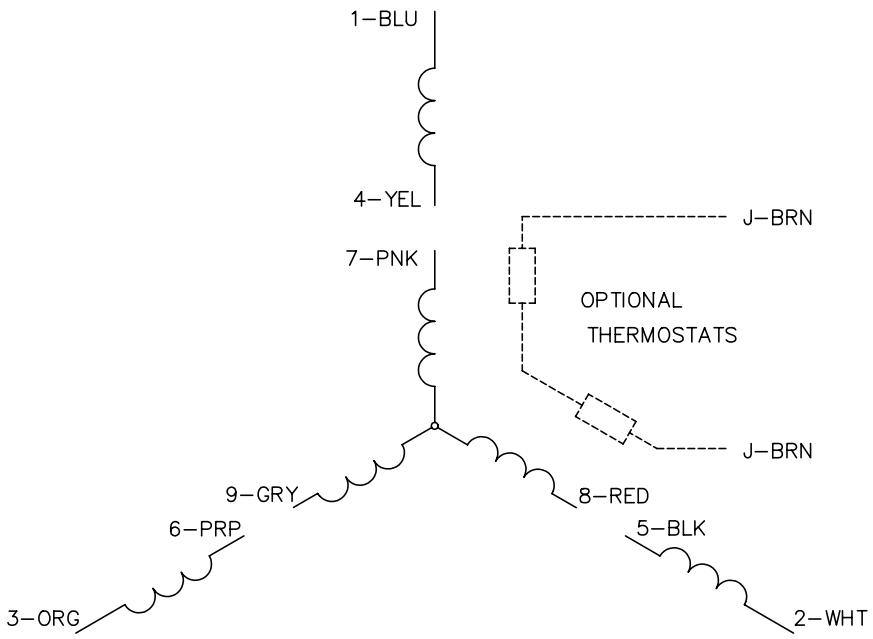

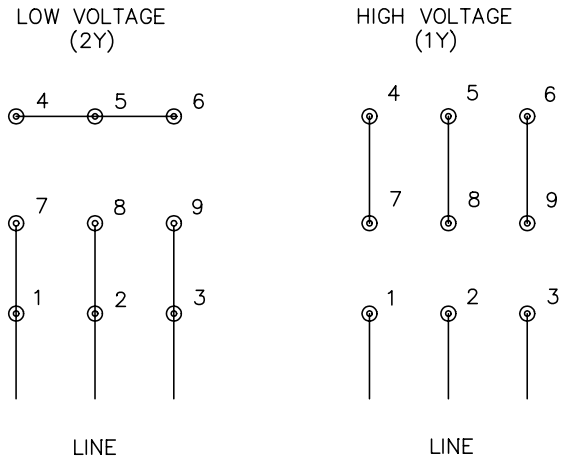

NOTES:

1. INTERCHANGE ANY TWO LINE LEADS TO REVERSE ROTATION.
2. OPTIONAL THERMOSTATS ARE PROVIDED WHEN SPECIFIED.
3. ACTUAL NUMBER OF INTERNAL PARALLEL CIRCUITS MAY BE A MULTIPLE OF THOSE SHOWN ABOVE.
4. LEAD COLORS ARE OPTIONAL. LEADS MUST ALWAYS BE NUMBERED AS SHOWN.

CD0005

REV. DESC: REVISE TO SHOW OPTIONAL COLORS			BALDOR ELECTRIC Co.
REV. LTR: E	BY: JLP	REVISED: 01/19/99 10:15	TDR: 0171435
CD0005		FILE: AAA00005140	MDL: –
		MTL: –	3PH, DV, 9 LEADS