VF2E-100M

Lock: Eccentric
Seal: Contact
Housing: Ductile
Temperature: -20°F to 200°F
Self Alignment: ±1.5°
Inserts: VE-100
Dimensions pg 94
Ratings pg 95

Bore Size	Fitting
1/2" - 1 7/16"	1/4" - 28NF

V VALUE & QUALITY
F FLANGE
2 TWO BOLT
E ECCENTRIC

1 100
0 INTERMEDIATE
0 DUTY
M DUCTILE

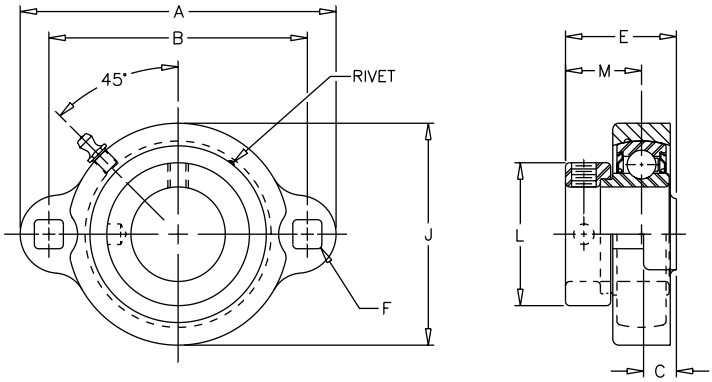

SHAFT DIA. IN.	UNIT NO.	BRG. NO.	Dimensions In Inches A	B	C	E	F	J	L	M	UNIT WT.
1/2	VF2E-108M	VE-108	3 3/16	2 1/2	13/32	1 13/64	9/32	1 15/16	1 3/16	5/8	0.6
5/8	VF2E-110M	VE-110									
3/4	VF2E-112M	VE-112	3 9/16	2 13/16	7/16	1 21/64	11/32	2 1/4	1 5/16	47/64	0.9
7/8	VF2E-114M	VE-114	3 3/4	3	7/16	1 11/32	11/32	2 1/2	1 1/2	49/64	1.0
15/16	VF2E-115M	VE-115									
1	VF2E-116M	VE-116									
1 1/8	VF2E-118M	VE-118	4 7/16	3 9/16	15/32	1 17/32	13/32	2 15/16	1 3/4	25/32	1.5
1 3/16	VF2E-119M	VE-119									
1 1/4	VF2E-120SM	VE-120S									
1 1/4	VF2E-120M	VE-120	4 13/16	3 15/16	1/2	1 11/16	13/32	3 3/8	2 3/16	55/64	1.9
1 3/8	VF2E-122M	VE-122									
1 7/16	VF2E-123M	VS-123									

REV 0

CROSS REFERENCE TO COMPETITORS PRODUCTS

		REPLACES SEALMASTER BRONZE LFT-E	REPLACES NTN AELFD2 or JELFD2*
REPLACES FAFNIR GRFTD or GVFTD	REPLACES LINK-BELT FX-YG200N		

Refer to Interchange Section Page 162 for more detail.
*-Cast Iron Housing

See page 152 for trademark acknowledgments.