Browning® Mounted Ball Bearings



Duty: Intermediate
Rolling Elements: Ball
Housing: Ductile Iron Two Bolt Flange
Self Alignment: +/- 1.5 Degrees
Lock: Setscrew
Seal: Contact
Temperature: -20° to 200°F

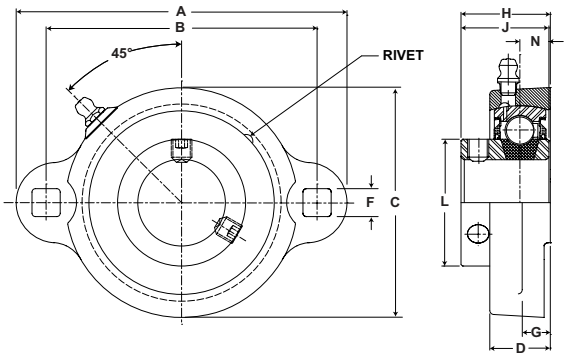

VF2S 100-M Series Intermediate Duty Ductile Iron Two Bolt Flanges - Setscrew Locking

Bore Diameter inch	Part No.	Bearing Insert No.	Basic Dynamic Rating lb/N	Dimensions inch / mm										Bolt Size	Unit Wt. lb/kg
				A	B	C	D	F Square	G	H	J	L	N		
1/2	VF2S-108M	VS-108	2108	3 3/16 81.0	2 1/2 63.5	1 15/16 49.2	5/8 15.9	19/64 7.5	13/32 10.3	31/32 24.6	15/16 23.8	31/32 24.6	5/16 7.9	1/4	.6 .27
5/8	VF2S-110M	VS-110	9377												
3/4	VF2S-112M	VS-112	2611 11614	3 9/16 90.5	2 13/16 71.4	2 1/4 57.2	23/32 18.3	23/64 9.1	7/16 11.1	1 7/64 28.2	1 1/16 27.0	1 3/16 30.2	11/32 8.7	5/16	.9 .41
7/8	VF2S-114M	VS-114	2801 12459	3 3/4 95.3	3 76.2	2 1/2 63.5	25/32 19.8	23/64 9.1	7/16 11.1	1 3/16 30.2	1 7/64 28.2	1 3/8 34.9	11/32 8.7	5/16	1.0 .45
15/16	VF2S-115M	VS-115													
1	VF2S-116M	VS-116													
1 1/8	VF2S-118M	VS-118	4381 19487	4 7/16 112.7	3 9/16 90.5	2 15/16 74.6	29/32 23.0	27/64 10.7	15/32 11.9	1 17/64 32.1	1 5/32 29.4	1 19/32 40.5	3/8 9.5	3/8	1.5 .68
1 3/16	VF2S-119M	VS-119													
1 1/4	VF2S-120SM	VS-120S													
1 1/4	VF2S-120M	VS-120	5782 25718	4 13/16 122.2	3 15/16 100.0	3 3/8 85.7	31/32 24.6	27/64 10.7	1/2 12.7	1 25/64 35.3	1 9/32 32.5	1 35/64 39.3	27/64 10.7	3/8	1.9 .86
1 3/8	VF2S-122M	VS-122													
1 7/16	VF2S-123M	VS-123													

Metric dimensions for reference only.
Not all parts are available from stock. Please contact customer service for availability (800) 626-2120.
For more information on bearing capabilities outside of our standard offering, please contact Application Engineering (800) 626-2093.