

Duty: Medium
Rolling Elements: Ball
Housing: Cast Iron Four Bolt Flange
Self Alignment: +/- 1.5 Degrees
Lock: BOA Concentric
Seal: Contact and Flinger
Temperature: -20° to 200°F

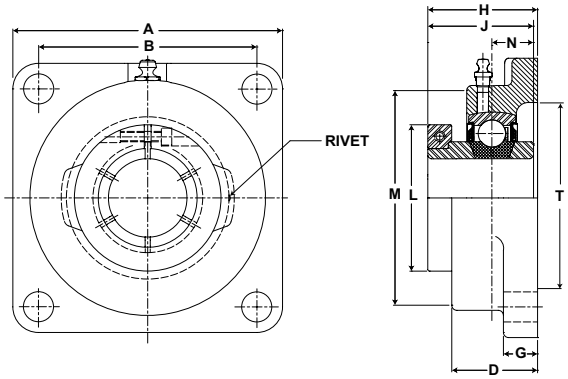

VF4B 300 Series Medium Duty Four Bolt Flanges - BOA Concentric Locking

Bore Diameter inch	Part No.	Bearing Insert No.	Basic Dynamic Rating lb/N	Dimensions inch / mm										Bolt Size	Unit Wt. lb/kg
				A	B*	D	G	H	J	L	M	N	T Cored		
1	VF4B-316	VB-316	4381 19487	4 1/4 108.0	3 1/4 82.6	1 5/64 27.4	17/32 13.5	1 5/8 41.3	1 9/16 39.7	2 1/16 52.4	3 1/8 79.4	5/8 15.9	2 7/8 73.0	7/16	3.0 1.36
1 3/16 1 1/4	VF4B-319 VF4B-320	VB-319 VB-220	5782 25718	4 5/8 117.5	3 5/8 92.1	1 5/32 29.4	19/32 15.1	1 13/16 46.0	1 3/4 44.5	2 7/16 61.9	3 5/8 92.1	11/16 17.5	3 1/4 82.6	1/2	3.0 1.36
1 7/16	VF4B-323	VB-323	7340 32648	5 1/8 130.2	4 101.6	1 19/64 32.9	5/8 15.9	2 5/64 52.8	2 50.8	2 11/16 68.3	4 1/8 104.8	3/4 19.1	3 1/2 88.9	1/2	5.1 2.31
1 8/16	VF4B-324	VB-324	7901 35144	5 3/8 136.5	4 1/8 104.8	1 21/64 33.7	5/8 15.9	2 7/64 53.6	2 50.8	2 13/16 71.4	4 3/8 111.1	3/4 19.1	3 7/8 98.4	9/16	5.1 2.31
1 11/16 1 3/4	VF4B-327 VF4B-328	VB-327 VB-328	7889 35090	5 5/8 142.9	4 3/8 111.1	1 23/64 34.5	5/8 15.9	2 7/32 56.4	2 3/32 53.2	7 3/4 196.9	4 9/16 115.9	3/4 19.1	4 101.6	9/16	5.9 2.68
1 15/16 2	VF4B-331 VF4B-332	VB-331 VB-232S	9752 43377	6 3/8 161.9	5 1/8 130.2	1 33/64 38.5	13/16 20.6	2 3/8 60.3	2 1/4 57.2	3 1/2 88.9	5 1/4 133.4	7/8 22.2	4 1/4 108.0	5/8	8.2 3.72
2 3/16	VF4B-335	VB-335	11789 52437	6 7/8 174.6	5 5/8 142.9	1 11/16 42.9	13/16 20.6	2 3/4 69.9	2 5/8 66.7	4 1/16 103.2	5 7/16 138.1	1 25.4	5 127.0	5/8	10.2 4.63

* To obtain bolt circle multiply B x 1.414".