

Duty: Standard
Rolling Elements: Ball
Housing: Cast Iron Four Bolt Flange
Self Alignment: +/- 1.5 Degrees
Lock: Setscrew
Seal: Contact and Flinger
Temperature: -20° to 200°F

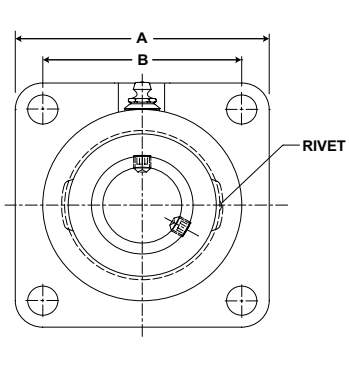

VF4S 200 Series Standard Duty Four Bolt Flanges - Setscrew Locking - Metric

Bore Diameter mm	Part No.	Bearing Insert No.	Basic Dynamic Rating N/lb	Dimensions mm / inch										Bolt Size	Unit Wt. kg/lb
				A	B*	D	G	H	J	L	M	N	T Cored		
20	VF4S-20 MM	VS-20 MM	11614 2611	85.7 3 3/8	63.5 2 1/2	22.6 57/64	11.1 7/16	32.5 1 9/32	31.0 1 7/32	30.2 1 3/16	63.5 2 1/2	12.7 1/2	50.8 2	M10	.64 1.4
25	VF4S-25 MM	VS-25 MM	12459 2801	95.3 3 3/4	69.9 2 3/4	24.2 61/64	12.7 1/2	36.5 1 7/16	34.9 1 3/8	34.9 1 3/8	69.9 2 3/4	14.3 9/16	63.5 2 1/2	M10	.73 1.6
30	VF4S-30 MM	VS-30 MM	19487 4381	108.0 4 1/4	82.6 3 1/4	27.4 1 5/64	13.5 17/32	39.7 1 9/16	38.1 1 1/2	40.5 1 19/32	79.4 3 1/8	15.9 5/8	73.0 2 7/8	M10	1.18 2.6
35	VF4S-35 MM	VS-35 MM	25718 5782	117.5 4 5/8	92.1 3 5/8	29.4 1 5/32	15.1 19/32	44.5 1 3/4	42.9 1 11/16	47.2 1 55/64	92.1 3 5/8	17.5 11/16	82.6 3.25	M12	1.63 3.6
40	VF4S-40 MM	VS-40 MM	32648 7340	130.2 5 1/8	101.6 4	32.9 1 19/64	15.9 5/8	51.2 2 1/64	49.2 1 15/16	52.4 2 1/16	104.8 4 1/8	19.1 3/4	88.9 3 1/2	M12	2.22 4.9
45	VF4S-45 MM	VS-45 MM	35144 7901	136.5 5 3/8	104.8 4 1/8	33.7 1 21/64	15.9 5/8	52.0 2 3/64	49.2 1 15/16	58.3 2 19/64	111.1 4 3/8	19.1 3/4	98.4 3 7/8	M14	2.36 5.2
50	VF4S-50 MM	VS-50 MM	35090 7889	142.9 5 5/8	111.1 4 3/8	34.5 1 23/64	15.9 5/8	54.8 2 5/32	51.6 2 1/32	62.7 2 15/32	115.9 4 9/16	19.1 3/4	101.6 4	M16	2.54 5.6
55	VF4S-55 MM	VS-55 MM	43377 9752	161.9 6 3/8	130.2 5 1/8	38.5 1 33/64	20.6 13/16	58.7 2 5/16	55.6 2 3/16	69.1 2 23/32	133.4 5 1/4	22.2 7/8	108.0 4 1/4	M16	3.58 7.9
60	VF4S-60 MM	VS-60 MM	52437 11789	174.6 6 7/8	142.9 5 5/8	42.9 1 11/16	20.6 13/16	68.3 2 11/16	55.6 2 3/16	75.8 2 63/64	138.1 5 7/16	25.4 1	127.0 5	M16	4.35 9.6

* To obtain bolt circle multiply B x 1.414".