BALDOR • RELIANCE

Product Information Packet

VP3436D

.57/.75HP,1750RPM,DC,D80D,3428P,TEFC,F2

Copyright © All product information within this document is subject to ABB Motors and Mechanical Inc. copyright © protection, unless otherwise noted.

Part Detail

Revision:	J	**Status:**	PRD/A	**Change #:**		**Proprietary:**	No
Type:	DC	**Prod. Type:**	3428P	**Elec. Spec:**	34WG3946	**CD Diagram:**	CD0194
Enclosure:	TEFC	**Mfg Plant:**		**Mech. Spec:**	34-6483	**Layout:**	34LY6483
Frame:	D80D	**Mounting:**	B35	**Poles:**	00	**Created Date:**	
Base:	RG	**Rotation:**	R	**Insulation:**	F	**Eff. Date:**	03-05-2018
Field Type:		**Literature:**		**Elec. Diagram:**		**Replaced By:**	

Specs

Enclosure:	TEFC		
Frame:	D80D		
Frame Material:	Steel		
XP Class and Group:	None		
Agency Approvals:	CE		
	CSA		
	UR		
	WEEE		
Base Indicator:	Rigid		
Bearing Grease Type:	Polyrex EM (-20F +300F)		
Drip Cover:	No Drip Cover		
Duty Rating:	CONT		
Feedback Device:	NO FEEDBACK		
Frame Prefix:	D		
Heater Indicator:	No Heater		
Insulation Class:	F		

Lifting Lugs:	No Lifting Lugs		
Motor Lead Quantity/Wire Size:	2 @ 14 AWG		
Motor Lead Exit:	Ko Box		
Motor Lead Termination:	Flying Leads		
Mounting Arrangement:	B35		
Product Family:	BISSIC		
Pulley End Bearing Type:	Sealed Bearing		
Shaft Extension Location:	Pulley End		
Shaft Ground Indicator:	No Shaft Grounding		
Shaft Rotation:	Reversible		
Shaft Slinger Indicator:	No Slinger		
Motor Standards:	IEC		
XP Division:	Not Applicable		

Nameplate NP1049L

CAT.NO.	VP3436D				
SPEC.	34-6483-3946				
KW/HP	.57/.75 TE	**I.P.**	54		
RPM	1750 TE				
IEC FRAME	D80D	**TYPE**	3428P		
ARM V	180	**ARM A**	3.7		
FLD V		**FLD A**			
INSUL	F	**AMB.**	40		
DUTY	CONT	**SUPPLY**	1.5		
BRG/DE	6206	**BRG/ODE**	6203		
BRUSHES	2/BP5000AW14				
		BLANK			
SER.					
BLANK					
APRV-CE		**APRV-CSA**		**APRV-UL**	

Parts List

Part Number	Description	Quantity
SA053022	SA 34-6483-3946	1.000 EA
AA005944	AA 34-6483-3946	1.000 EA
BP5000AW14SP	CARBON BRUSH - 33P, 180 VOLTS	1.000 EA
HA3210B66	.125 DIA X .281 (AUTO)	2.000 EA
11XW1032G06	10-32 X .38, TAPTITE II, HEX WSHR SLTD U	1.000 EA
34EP3103B14	FR ENDPLATE MACH 34PM TEFC F-2 MTG W/PG-	1.000 EA
WD4100A17	PLUG STIMPSON D4036	1.000 EA
HW5100A03	WAVY WASHER (W1543-017)	1.000 EA
34EP2505A01	FLG MTG EP IEC F165 ENCL 205 BRG MACH.	1.000 EA
HW4600B49	SEAL 0.938 X 1.624 X 0.250 SINGLE LIP DB	1.000 EA
51XN1032A24	10-32 X 1 1/2 HX WS SL SR	2.000 EA
BP5201A11SP	BRUSH HOLDER ASSY W/BP4511A01 & BP3000A0	1.000 EA
80XN1032A03	10-32 X 3/16 SET SCREW	2.000 EA
34FN3002A01SP	EXTERNAL FAN, PLASTIC, .637/.639 HUB W/	1.000 EA
34FH5002A01SP	FAN COVER ASSY W/SHAFT COVER	1.000 EA
51XW1032A06	10-32 X .38, TAPTITE II, HEX WSHR SLTD S	3.000 EA
34CB4504SP	CONDUIT BOX LID, STAMPED	1.000 EA
34GS1011SP	GASKET, CONDUIT BOX LID	1.000 EA
51XW0832A07	8-32 X .44, TAPTITE II, HEX WSHR SLTD SE	2.000 EA
HW3001B02	BRASS CUP WASHER W/GROUND SYMBOL TAB,	1.000 EA
WD4102A01	SR-6L-1 HEYCO STRN RELIEF OR 23MPO6L10 M	1.000 EA
HW2504E10	KEY, 6 MM X 1.000	1.000 EA
HA7000A11	KEY RETAINER 0.750 DIA SHAFTS	1.000 EA
MG1000G27	MED CHARCOAL METALLIC GREY 400-0096	0.014 GA

Parts List (continued)

Part Number	Description	Quantity
MJ5004A05	#242-21 LOCTITE GENERAL PURPOSE MED. STR	0.001 EA
MJ5001A27	32220KN GRAY SEALER *MIN BUY 4 QTS=1GAL	0.001 QT
85XU0407S04	4X1/4 U DRIVE PIN STAINLESS	2.000 EA
ML14A1B14	14 AWG,A1,BLACK	8.500 IN
ML14A2B14	14 AWG,A2,BLACK	8.500 IN
HA3100A47	THRUBOLT 10-32 X 7.625	4.000 EA
LB1119N	WARNING LABEL	1.000 EA
MN416A01	TAG-INSTAL-MAINT no wire (1200/bx) 5/18	1.000 EA
LC0194	CONNECTION LABEL	1.000 EA
NP1049L	NP STD LASER ENGRAVED IEC DC MOTORS, UL	1.000 EA
27PA1006	PKG GRP, PRINT PK1027A06	1.000 EA

DC Motor Performance Data

Record # 1048 - Typical performance - not guaranteed values

Winding: 34WG3946-R001	**Type:** 3428P	**Enclosure:** TEFC

Nameplate Data			General Characteristics	
Rated Output (HP)	0.75		Armature Resistance @ 25ºC	2.728 Ω
R.P.M.	1750			
Armature Volts	180			
Armature Amps	3.7			
Field Volts			Armature Inductance	27.3166 mH
Field Amps				
Rating - Duty	40C AMB-CONT			
Form Factor	1.5			

Load Characteristics at 180 Armature Volts

Load Point	1	2	3	4	5	6	7
Armature Amps	0.16	1.36	2.56	3.76	5.66	6.72	8.16
R.P.M.	1985	1934	1883	1832	1750	1705	1644
Torque (LB-FT)	0	0.75	1.5	2.25	3.44	4.1	5

Performance Graph at 180.0 Arm V, 0.75HP Typical performance - Not guaranteed values

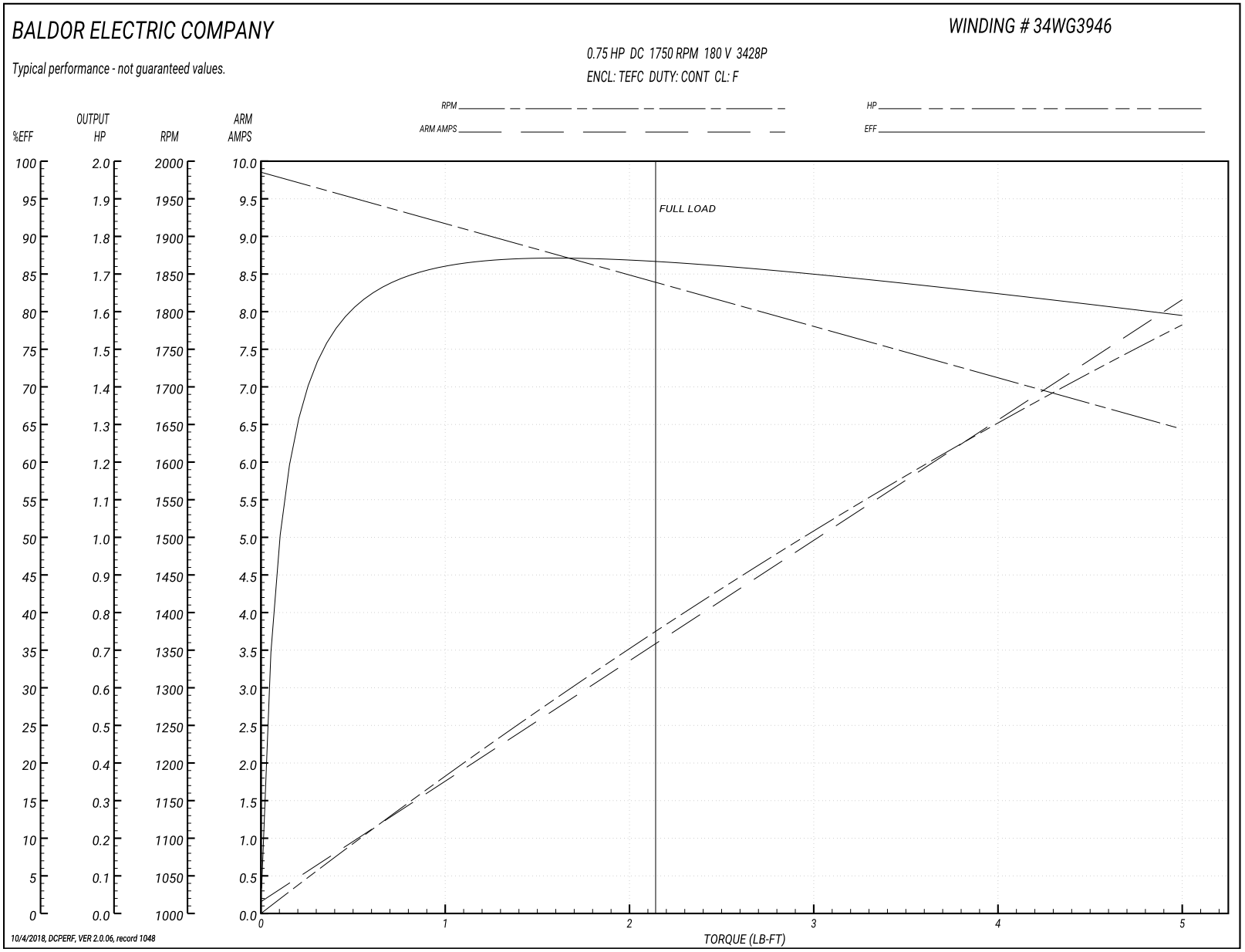

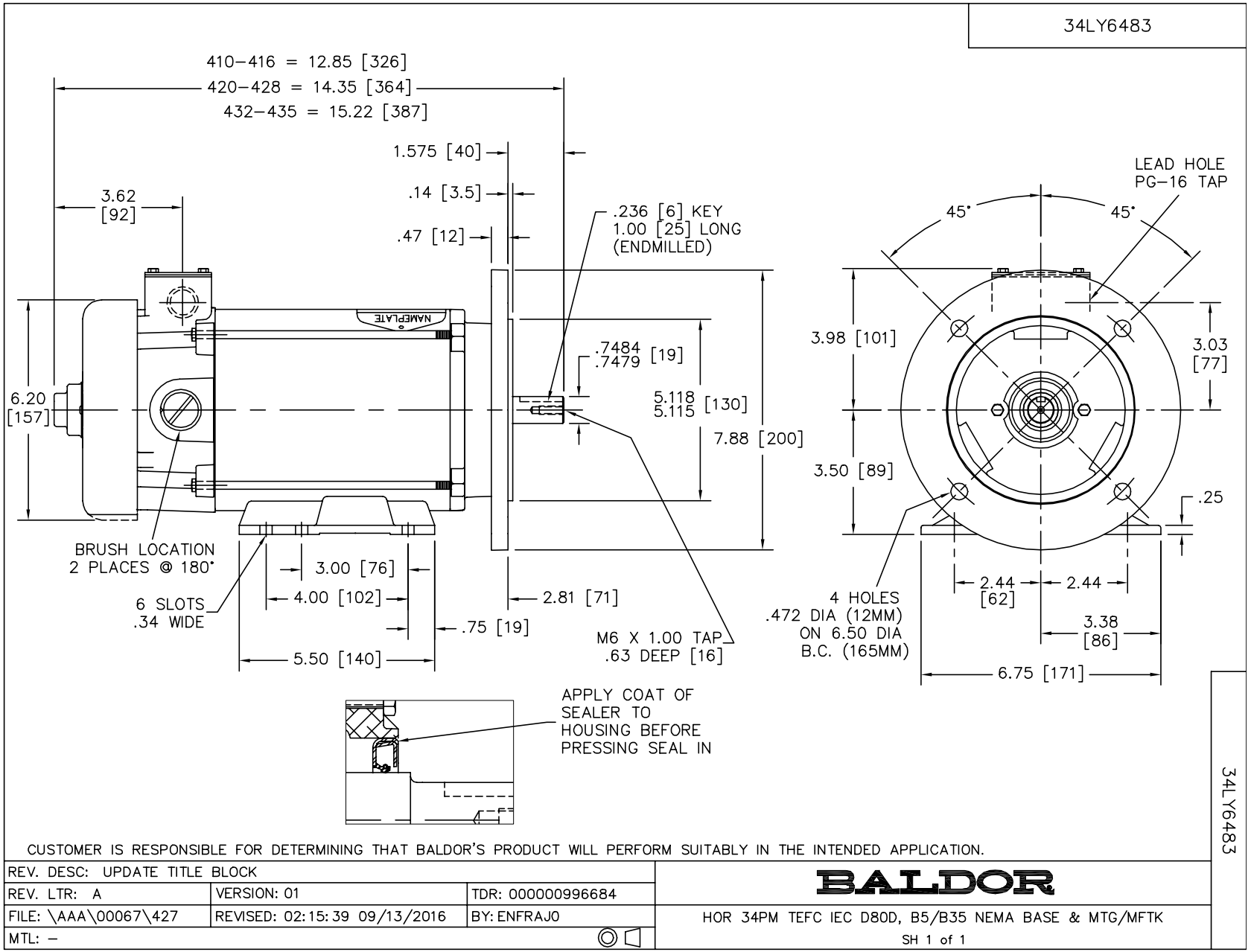
34LY6483
410–416 = 12.85 [326]
420–428 = 14.35 [364]
432–435 = 15.22 [387]
1.575 [40]
.14 [3.5]
.47 [12]
3.62 [92]
.236 [6] KEY
1.00 [25] LONG
(ENDMILLED)
NAMEPLATE
.7484
.7479 [19]
5.118
5.115 [130]
7.88 [200]
6.20 [157]
BRUSH LOCATION
2 PLACES @ 180°
3.00 [76]
4.00 [102]
6 SLOTS
.34 WIDE
.75 [19]
2.81 [71]
5.50 [140]
M6 X 1.00 TAP
.63 DEEP [16]
LEAD HOLE
PG–16 TAP
45°
45°
3.98 [101]
3.03 [77]
3.50 [89]
.25
2.44 [62]
2.44
4 HOLES
.472 DIA (12MM)
ON 6.50 DIA
B.C. (165MM)
3.38 [86]
6.75 [171]
APPLY COAT OF
SEALER TO
HOUSING BEFORE
PRESSING SEAL IN
34LY6483
CUSTOMER IS RESPONSIBLE FOR DETERMINING THAT BALDOR'S PRODUCT WILL PERFORM SUITABLY IN THE INTENDED APPLICATION.
REV. DESC: UPDATE TITLE BLOCK
REV. LTR: A
VERSION: 01
TDR: 000000996684
FILE: \AAA\00067\427
REVISED: 02:15:39 09/13/2016
BY: ENFRAJ0
MTL: –
BALDOR
HOR 34PM TEFC IEC D80D, B5/B35 NEMA BASE & MTG/MFTK
SH 1 of 1

CD0194

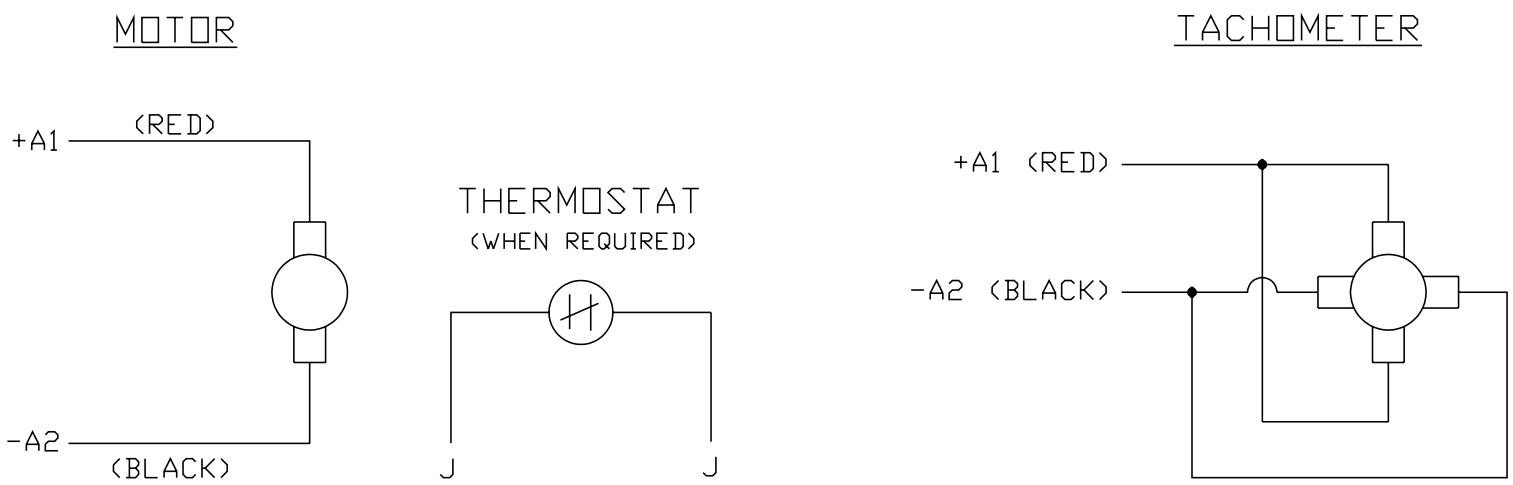

NOTES:

1. CCW ROTATION AS SHOWN FACING COMMUTATOR END. TO REVERSE MOTOR ROTATION OR TACHOMETER OUTPUT POLARITY INTERCHANGE LEADS A1(RED) & A2(BLACK)

2. LEAD COLORS FOR REFERENCE ONLY & NOT SPECIFIED BY THIS DRAWING. LEAD COLORS SPECIFIED BY LAYOUT DRAWING & BILL OF MATERIAL ONLY.

CD0194

MATL: –				BALDOR ELECTRIC Co.
REV: E	ADDED NOTE "LEAD COLORS FOR REFERENCE ONLY &....			
CD0194	SCALE: –	BY: CK	REVISED: 07/28/95	CD TYPE P DC PERMANENT MAGNET MOTORS AND TACHOMETERS
	FILE: AAA00004503		TDR: 0078737	