

Duty: Standard

Rolling Elements: Ball

Housing: Cast Iron Tapped Base Pillow Block

Self Alignment: +/- 1.5 Degrees

Lock: BOA

Seal: Contact and Flinger

Temperature: -20° to 200°F

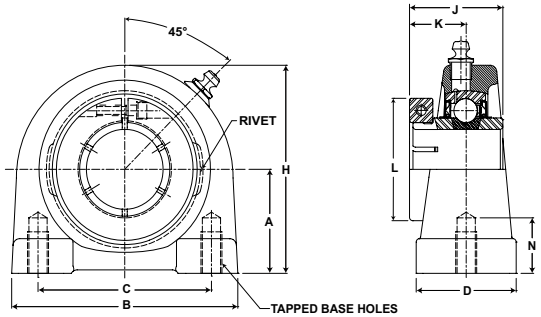

VTBB 200 Series Standard Duty Tapped Base Pillow Blocks - BOA Concentric Locking

Bore Diameter inch	Part No.	Bearing Insert No.	Basic Dynamic Rating lb/N	Dimensions inch / mm								Tapped Hole Thread Size	N Min Tap Depth	Unit Wt. lb/kg
				A	B	C	D	H	J	K	L			
3/4	VTBB-212	VB-212	2611 11614	1 5/16 33.3	2 7/8 73.0	2 50.8	1 1/2 38.1	2 9/16 65.1	1 9/32 32.5	25/32 19.8	1 3/4 44.5	3/8-16	1/2	1.7 .77
7/8 15/16 1	VTBB-214 VTBB-215 VTBB-216	VB-214 VB-215 VB-216	2801 12459	1 7/16 36.5	3 76.2	2 50.8	1 1/2 38.1	2 13/16 71.4	1 7/16 36.5	7/8 22.2	1 15/16 49.2	3/8-16	1/2	1.8 .82
1 1/8 1 3/16 1 1/4	VTBB-218 VTBB-219 VTBB-220S	VB-218 VB-219 VB-220S	4381 19487	1 11/16 42.9	4 101.6	3 76.2	1 1/2 38.1	3 3/8 85.7	1 9/16 39.7	15/16 23.8	2 3/16 55.6	7/16-14	5/8	2.8 1.27
1 1/4	VTBB-220	VB-220	5782 25718	1 7/8 47.6	4 1/4 108.0	3 1/4 82.6	1 7/8 47.6	3 3/4 95.3	1 3/4 44.5	1 1/16 27.0	2 7/16 61.9	1/2-13	3/4	4.0 1.81
1 3/8 1 7/16	VTBB-222 VTBB-223	VB-222 VB-223	5782 25718	1 7/8 47.6	4 1/4 108.0	3 1/4 82.6	1 7/8 47.6	3 3/4 95.3	1 3/4 44.5	1 1/16 27.0	2 9/16 65.1	1/2-13	3/4	4.0 1.81
1 1/2	VTBB-224	VB-224	7340 32648	1 15/16 49.2	4 5/8 117.5	3 1/2 88.9	1 7/8 47.6	3 15/16 100.0	2 50.8	1 1/4 31.8	2 11/16 68.3	1/2-13	3/4	4.5 2.04
1 5/8	VTBB-226	VB-226	7901 35144	2 1/8 54.0	5 127.0	3 3/4 95.3	2 50.8	4 1/4 108.0	2 50.8	1 1/4 31.8	2 13/16 71.4	1/2-13	3/4	5.6 2.54
1 11/16 1 3/4	VTBB-227 VTBB-228	VB-227 VB-228	7901 35144	2 1/8 54.0	5 127.0	3 3/4 95.3	2 50.8	4 1/4 108.0	2 50.8	1 1/4 31.8	2 15/16 74.6	1/2-13	3/4	5.6 2.54
1 15/16 2	VTBB-231 VTBB-232S	VB-231 VB-232S	7889 35090	2 1/4 57.2	5 1/2 139.7	4 101.6	2 50.8	4 5/8 117.5	2 3/32 53.2	1 11/32 34.1	3 3/8 85.7	5/8-11	7/8	6.9 3.13