Browning® Mounted Ball Bearings



Duty: Standard

Rolling Elements: Ball

Housing: Cast Iron Tapped Base Pillow Block

Self Alignment: +/- 1.5 Degrees

Lock: Setscrew

Seal: Contact and Flinger

Temperature: -20° to 200°F

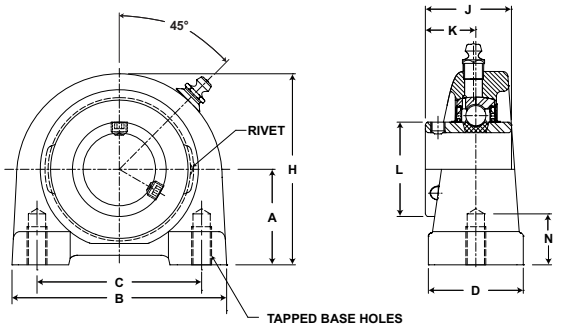

VTBS 200 Series Standard Duty Tapped Base Pillow Blocks - Setscrew Locking - Metric

Bore Diameter mm	Part No.	Bearing Insert No.	Basic Dynamic Rating N/lb	Dimensions mm / inch								Tapped Hole Thread Size	N Min Tap Depth	Unit Wt. kg/lb
				A	B	C	D	H	J	K	L			
20	VTBS-20 MM	VS-20 MM	11614 2611	33.3 1 5/16	73.0 2 7/8	50.8 2	38.1 1 1/2	65.1 2 9/16	31.0 1 7/32	18.3 23/32	30.2 1 3/16	M8	12.7	.68 1.5
25	VTBS-25MM	VS-25MM	12459 2801	36.5 1 7/16	76.2 3	50.8 2	38.1 1 1/2	71.4 2 13/16	34.9 1 3/8	20.6 13/16	34.9 1 3/8	M25	12.7	.73 1.6
30	VTBS-30MM	VS-30MM	19487 4381	42.9 1 11/16	101.6 4	76.2 3	38.1 1 1/2	85.7 3 3/8	38.1 1 1/2	22.2 7/8	40.5 1 19/32	M10	15.9	1.13 2.5
35	VTBS-35MM	VS-35MM	25718 5782	47.6 1 7/8	108.0 4 1/4	82.6 3 1/4	47.6 1 7/8	95.3 3 3/4	42.9 1 11/16	25.4 1	47.2 1 55/64	M10	19.1	1.5 3.4
40	VTBS-40MM	VS-40MM	32648 7340	49.2 1 15/16	117.5 4 5/8	88.9 3 1/2	47.6 1 7/8	100.0 3 15/16	49.2 1 15/16	30.2 1 3/16	52.4 2 1/16	M12	19.1	1.72 3.8
45	VTBS-45MM	VS-45MM	35144 7901	54.0 2 1/8	127.0 5	95.3 3 3/4	50.8 2	108.0 4 1/4	49.2 1 15/16	30.2 1 3/16	58.3 2 19/64	M12	19.1	2.13 4.7
50	VTBS-50MM	VS-50MM	35090 7889	57.2 2 1/4	139.7 5 1/2	101.6 4	50.8 2	117.5 4 5/8	51.6 2 1/32	32.5 1 9/32	62.7 2 15/32	M16	22.2	2.59 5.7

Metric dimensions for reference only.
Not all parts are available from stock. Please contact customer service for availability (800) 626-2120.
For more information on bearing capabilities outside of our standard offering, please contact Application Engineering (800) 626-2093.