

TOP VIEW

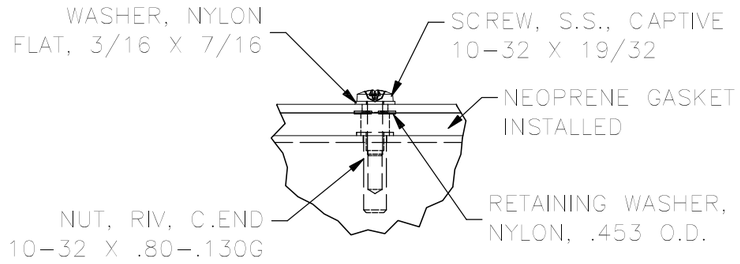

DETAIL D
(8 PL.)

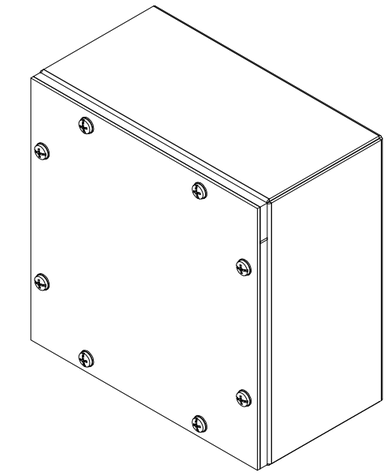

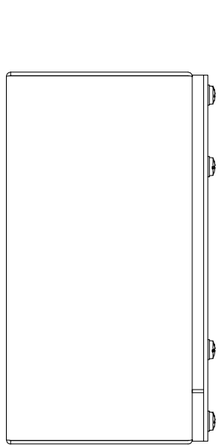

LEFT SIDE VIEW

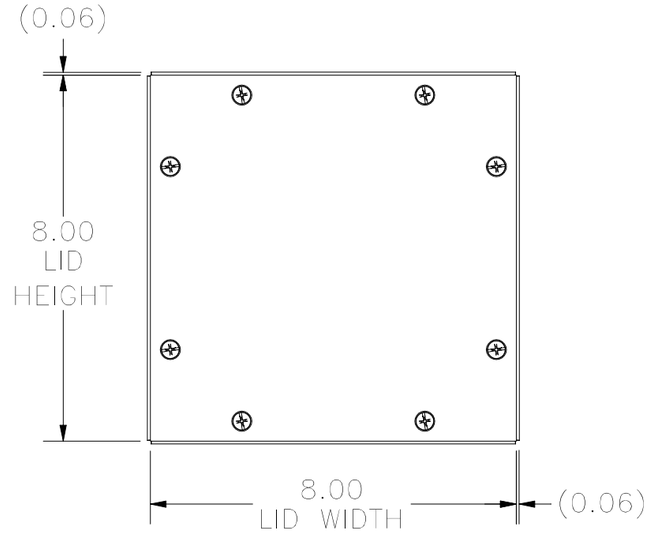

FRONT VIEW

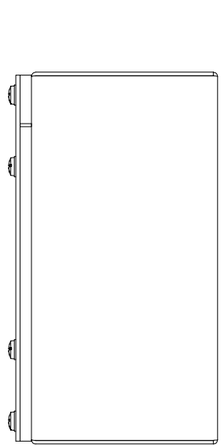

RIGHT SIDE VIEW

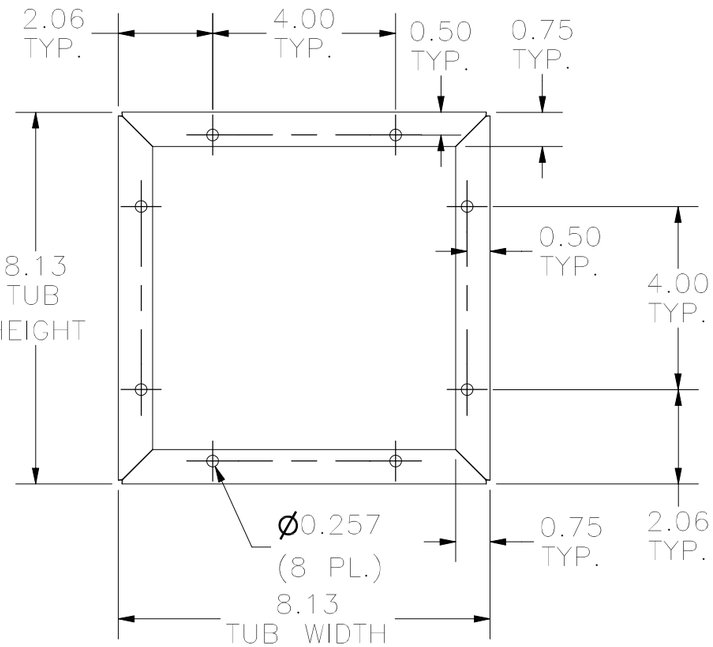

FRONT VIEW TUB

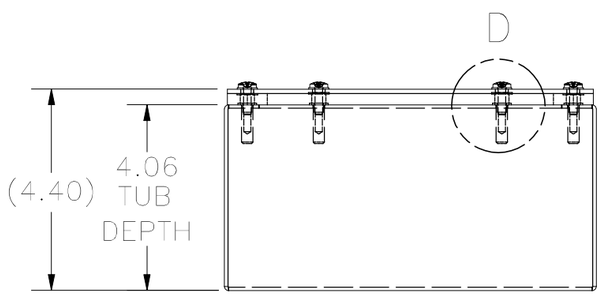

BOTTOM VIEW

PART#: WA080804GSCG
(DATA SUBJECT TO CHANGE WITHOUT NOTICE)

THIS DRAWING IS PROPERTY OF HUBBELL INC. WIEGMANN
ALL INFORMATION IS PROPRIETARY AND NOT TO BE DUPLICATED