

TOP VIEW

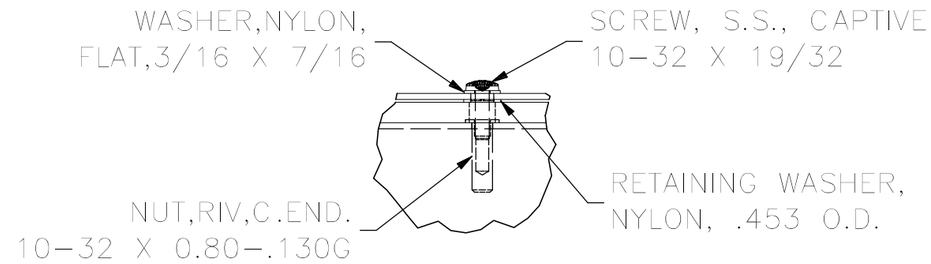

DETAIL D
(8 PL.)

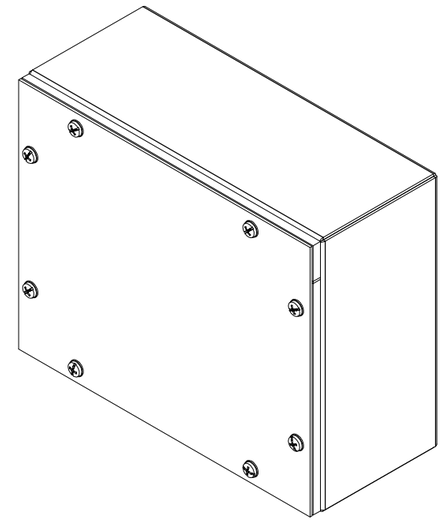

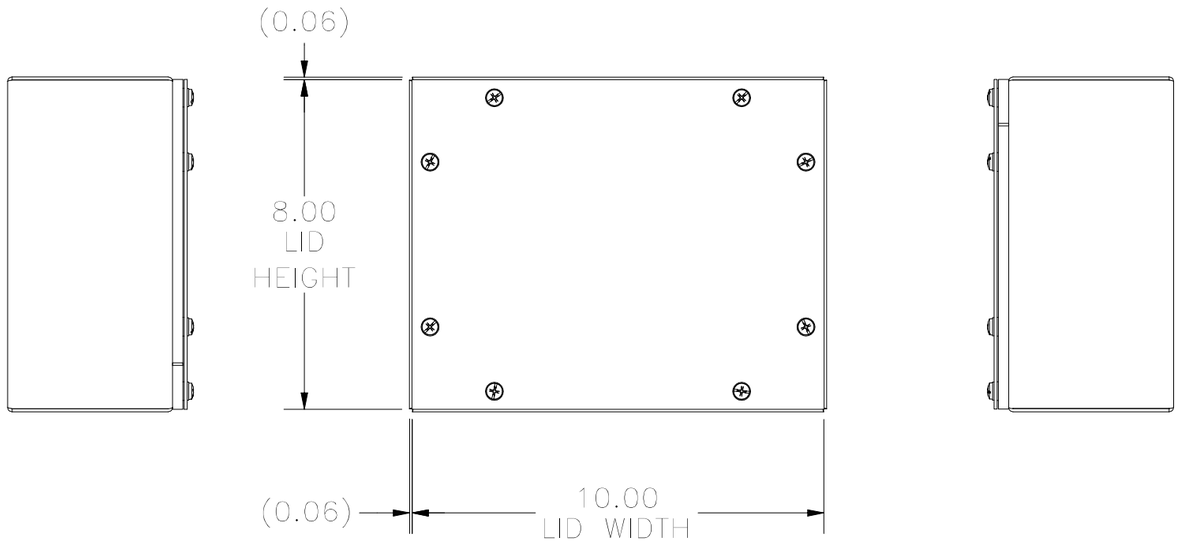

LEFT VIEW

FRONT VIEW

RIGHT VIEW

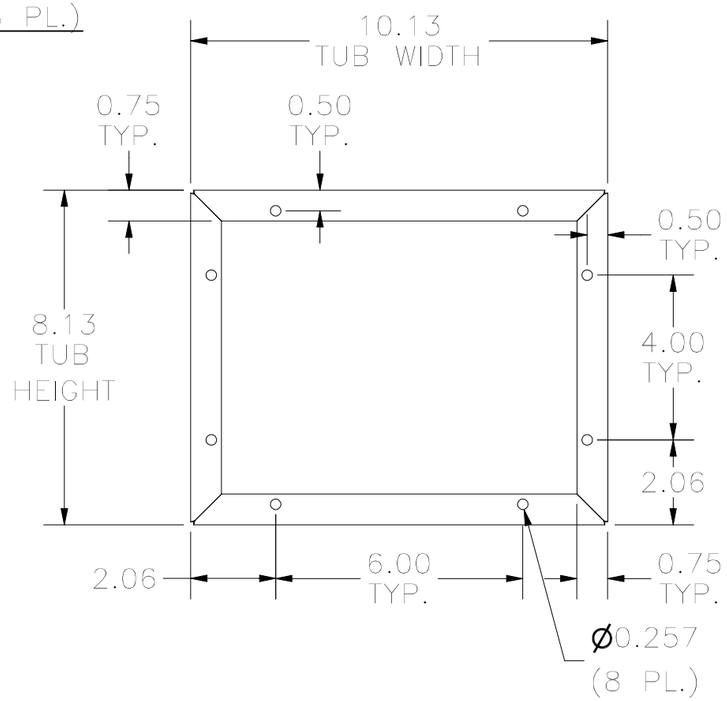

FRONT VIEW TUB

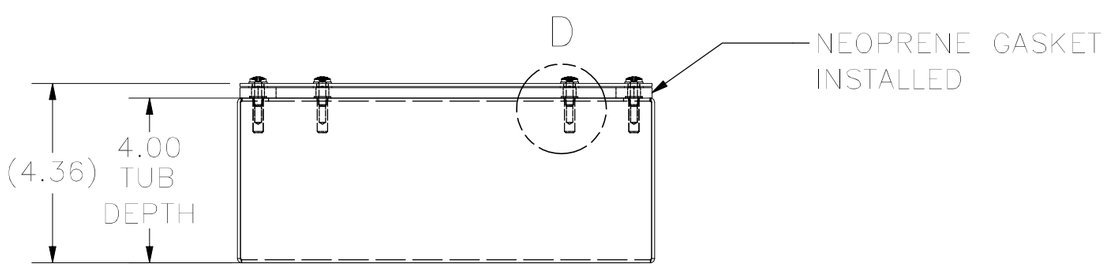

BOTTOM VIEW

PART#: WA081004GSC
(DATA SUBJECT TO CHANGE WITHOUT NOTICE)

THIS DRAWING IS PROPERTY OF HUBBELL INC. WIEGMANN
ALL INFORMATION IS PROPRIETARY AND NOT TO BE DUPLICATED