

TOP VIEW

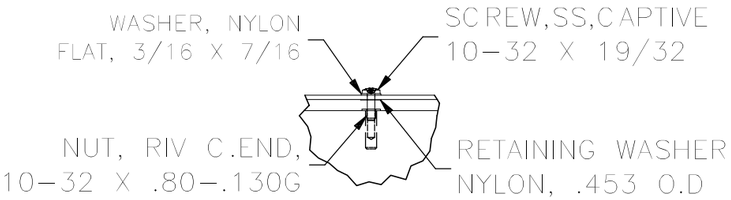


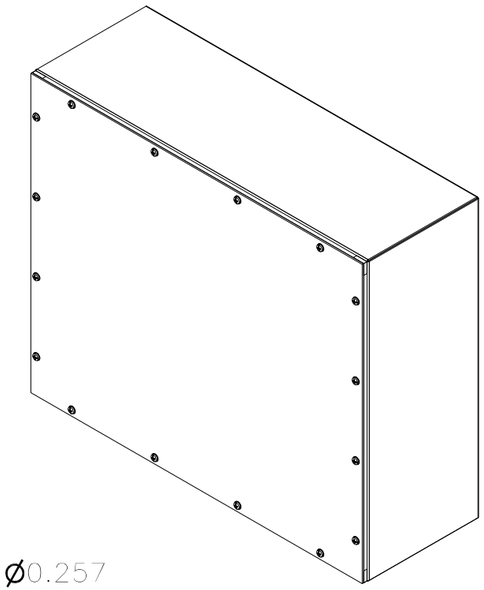

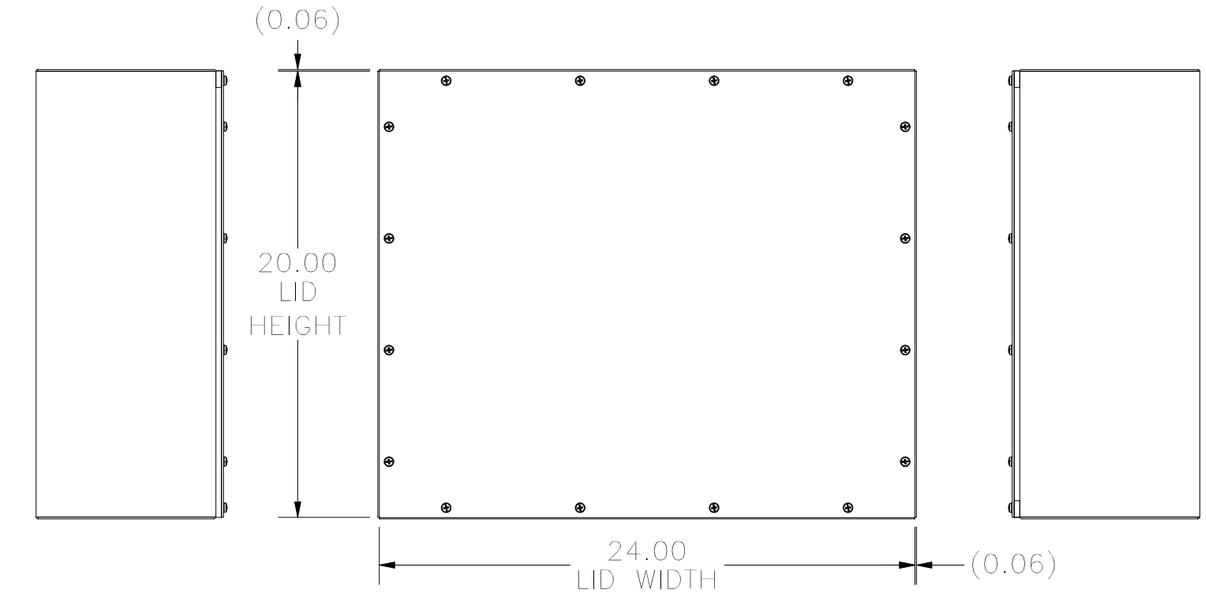


LEFT SIDE VIEW



RIGHT SIDE VIEW

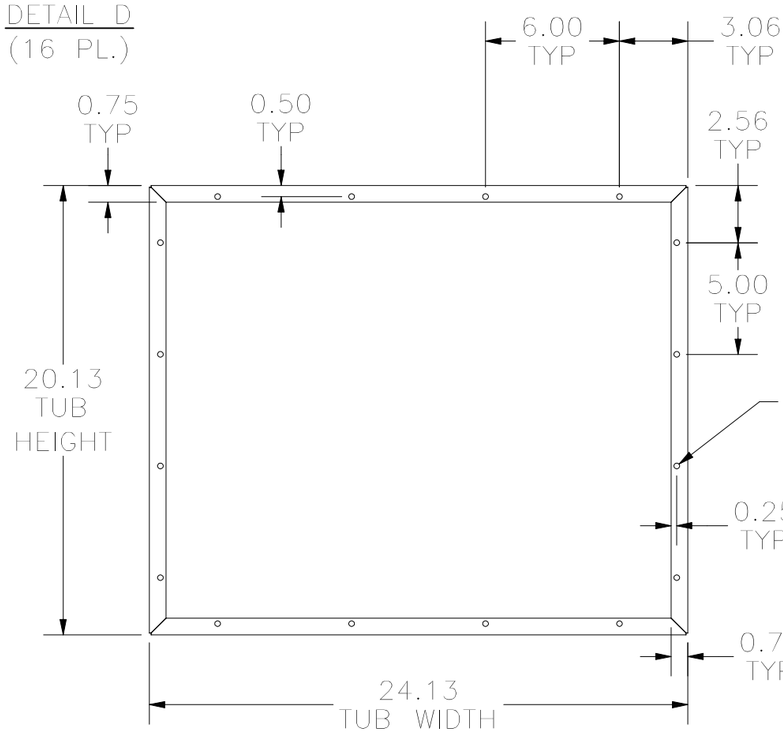


FRONT VIEW TUB

FRONT VIEW

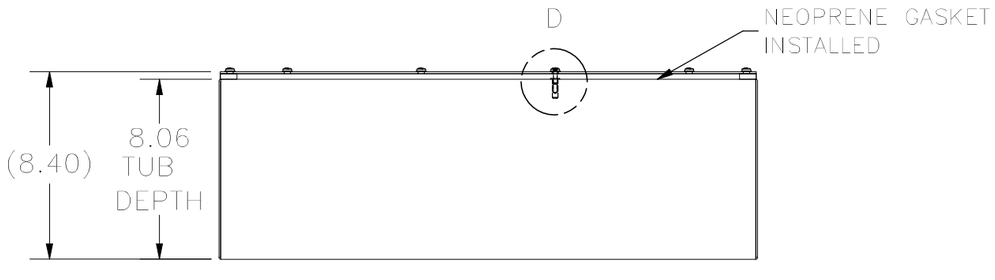


BOTTOM VIEW

PART#: WA202408GSCG
(DATA SUBJECT TO CHANGE WITHOUT NOTICE)

THIS DRAWING IS PROPERTY OF HUBBELL INC. WIEGMANN
ALL INFORMATION IS PROPRIETARY AND NOT TO BE DUPLICATED