

TOP VIEW

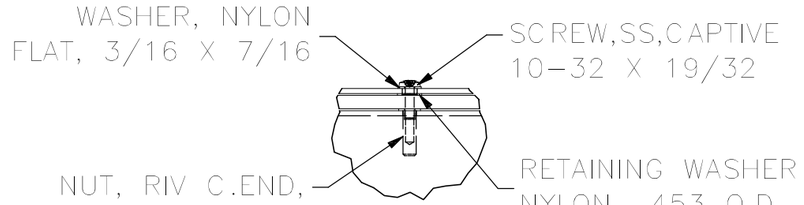

DETAIL E
(20 PL.)

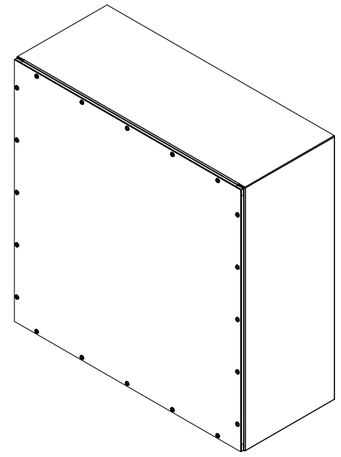

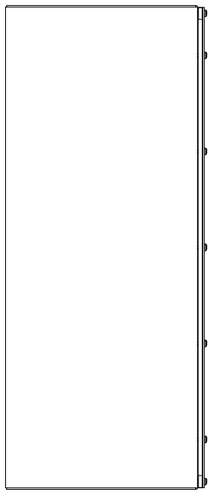

LEFT SIDE VIEW

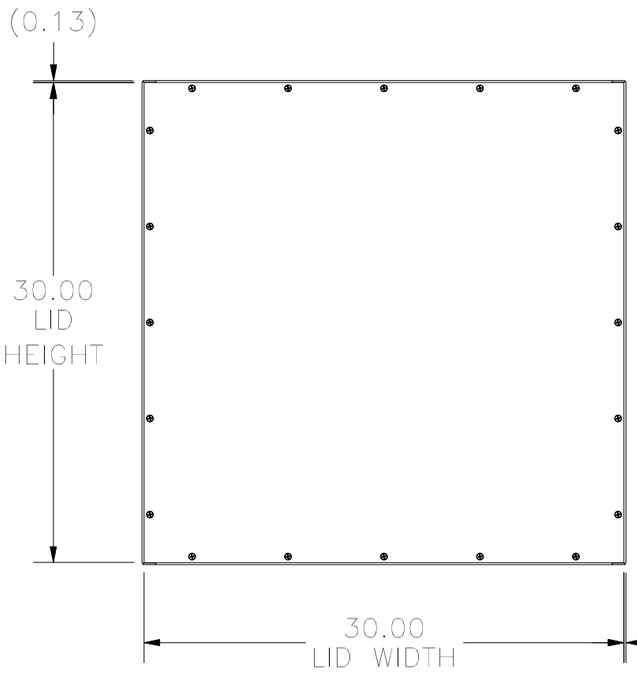

FRONT VIEW



RIGHT SIDE VIEW

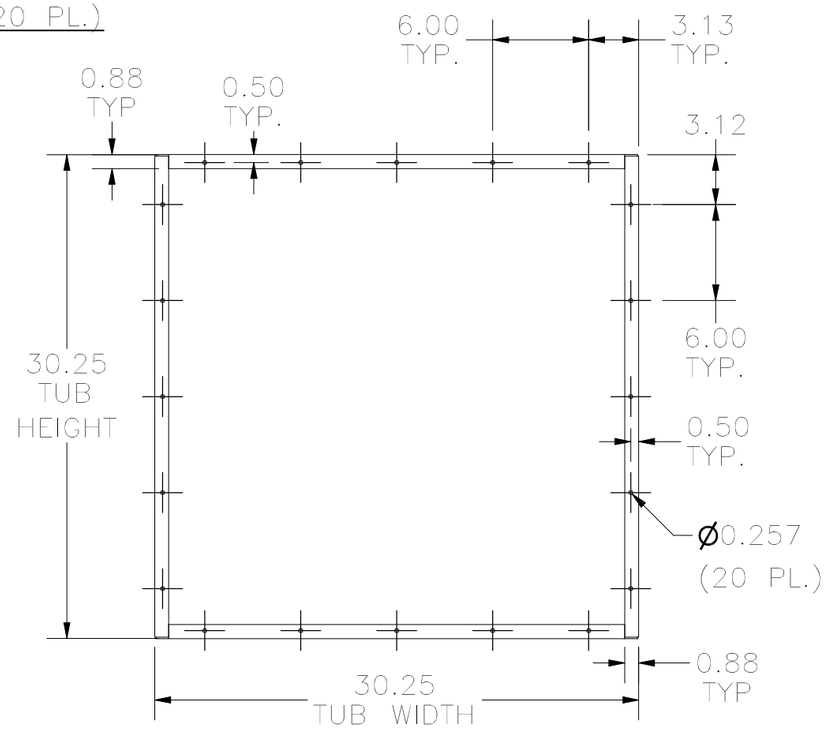

FRONT VIEW OF TUB

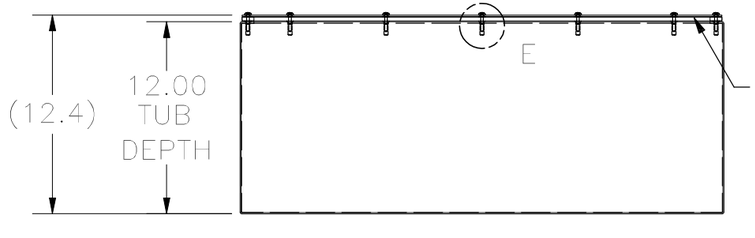

BOTTOM VIEW

PART#: WA303012GSC
(DATA SUBJECT TO CHANGE WITHOUT NOTICE)

THIS DRAWING IS PROPERTY OF HUBBELL INC. WIEGMANN
ALL INFORMATION IS PROPRIETARY AND NOT TO BE DUPLICATED