

TOP VIEW

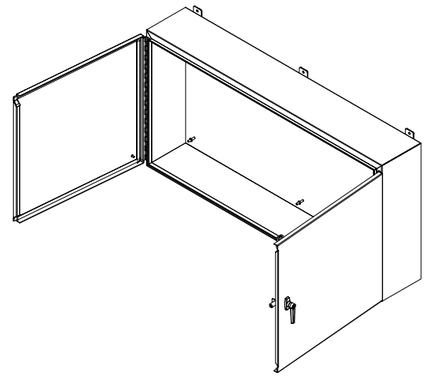

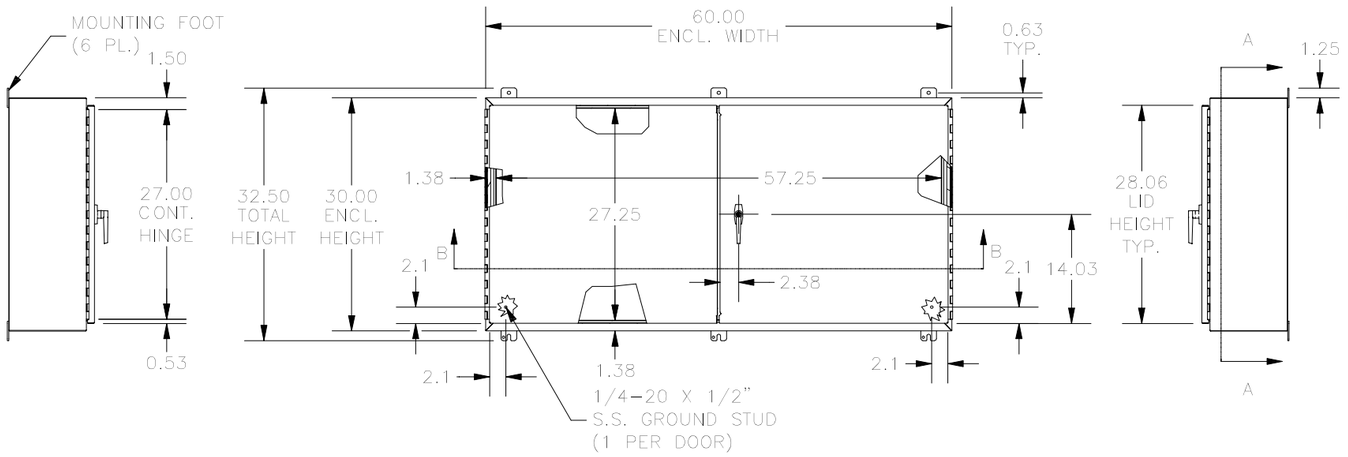

LEFT SIDE VIEW

FRONT VIEW

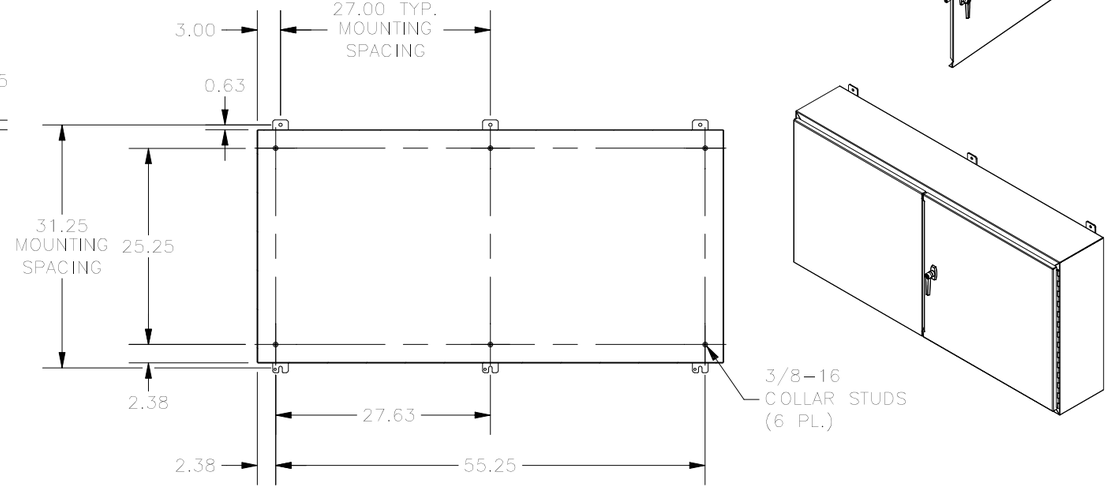

RIGHT SIDE VIEW

SECTION A-A
(INSIDE BACK VIEW OF ENCL.)

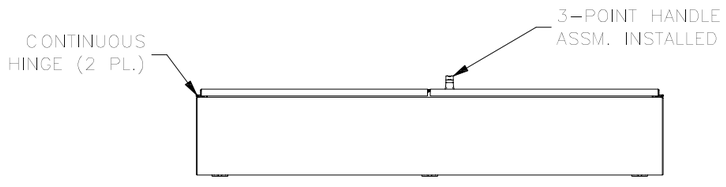

BOTTOM VIEW

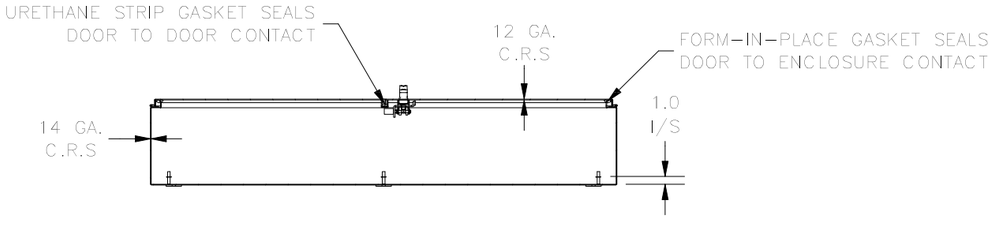

SECTION B-B
(INSIDE VIEW OF TOP)

PART#: WA306010WF
(DATA SUBJECT TO CHANGE WITHOUT NOTICE)

THIS DRAWING IS PROPERTY OF HUBBELL INC. WIEGMANN
ALL INFORMATION IS PROPRIETARY AND NOT TO BE DUPLICATED