

TOP VIEW

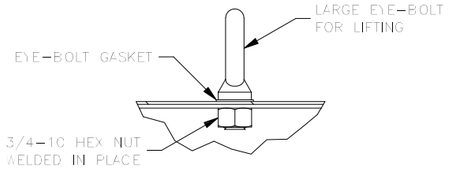

DETAIL A
(LIFT EYE DETAIL)
(TYP.)

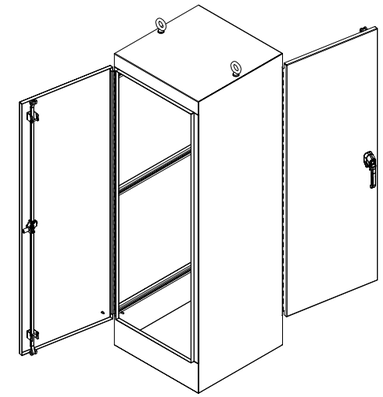

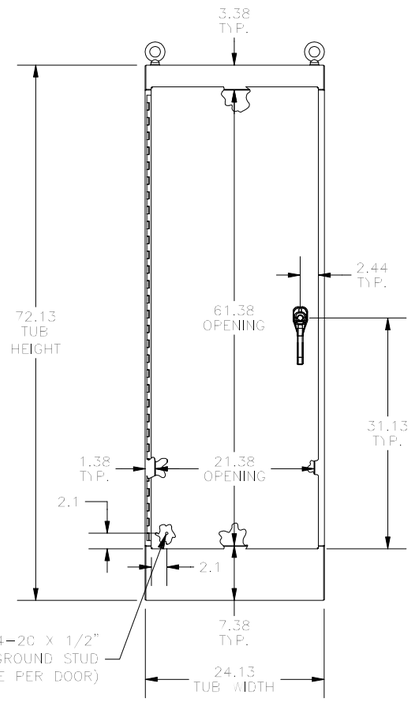

FRONT VIEW

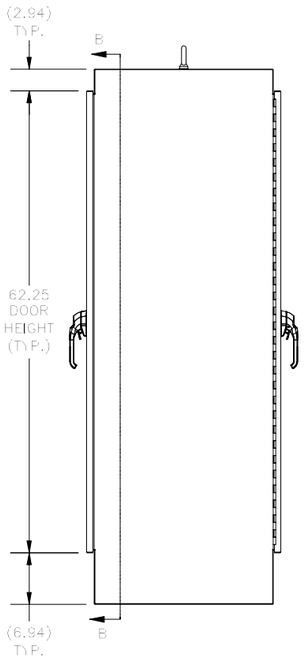

SIDE VIEW

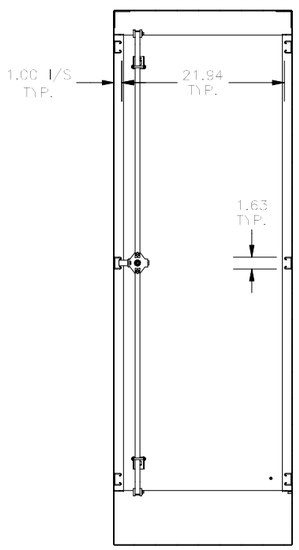

SECTION B-B
(INSIDE FRONT/BACK OF ENCL)
(TYP. FOR BOTH SIDES)

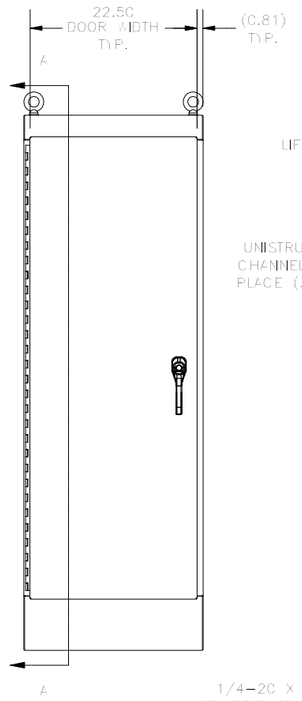

REAR VIEW

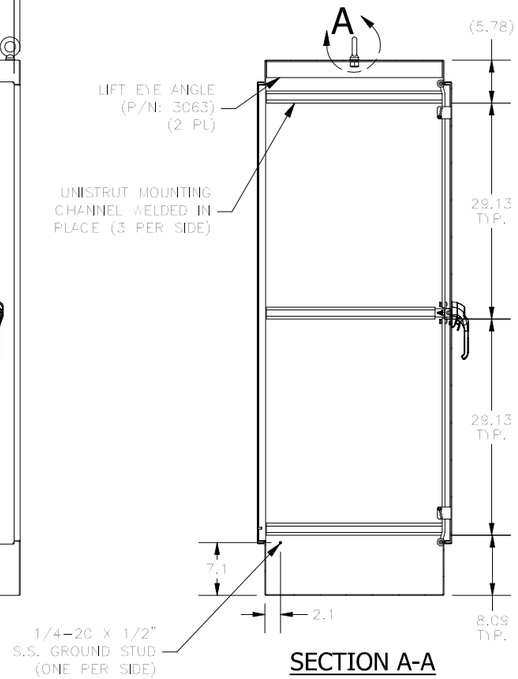

SECTION A-A
(INSIDE SIDE OF ENCL.)
(TYP.)

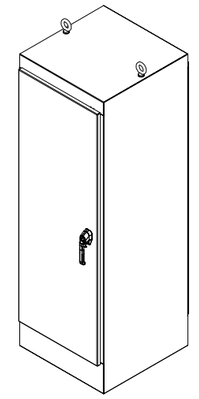

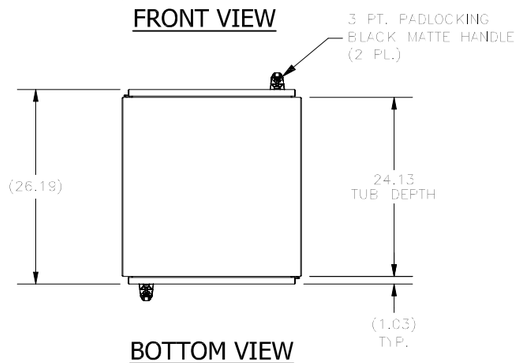

BOTTOM VIEW

PART#: WA722424FSDA
(DATA SUBJECT TO CHANGE WITHOUT NOTICE)

THIS DRAWING IS PROPERTY OF HUBBELL INC. WIEGMANN
ALL INFORMATION IS PROPRIETARY AND NOT TO BE DUPLICATED