

LEFT SIDE VIEW

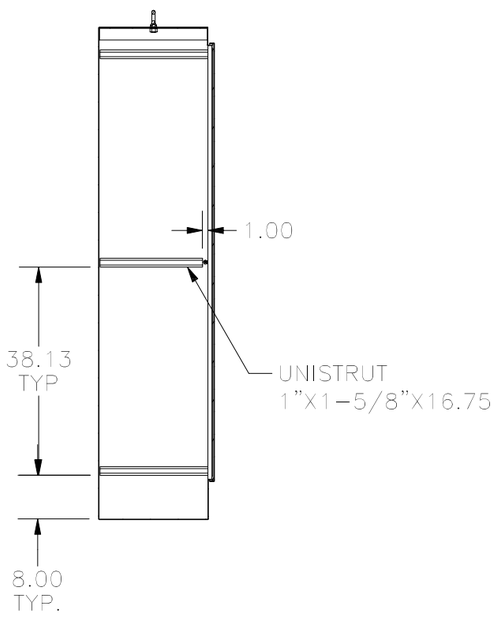

SECTION A-A
(INSIDE RIGHT VIEW OF ENCLOSURE)

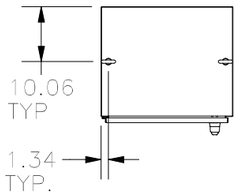

TOP VIEW

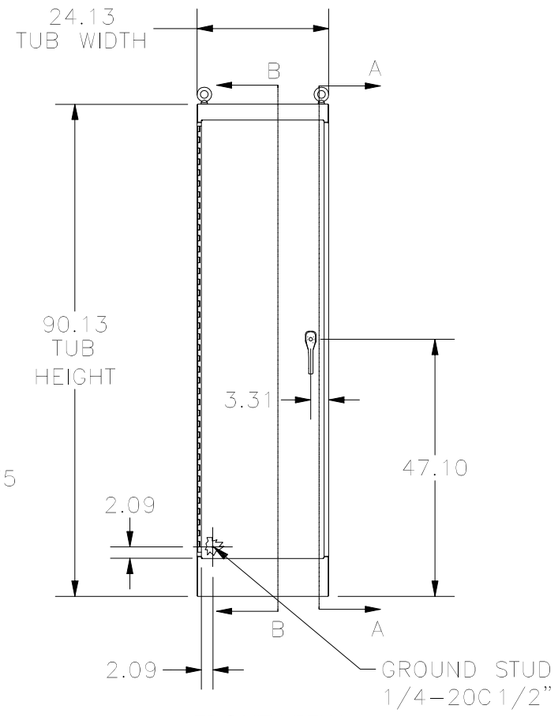

FRONT VIEW

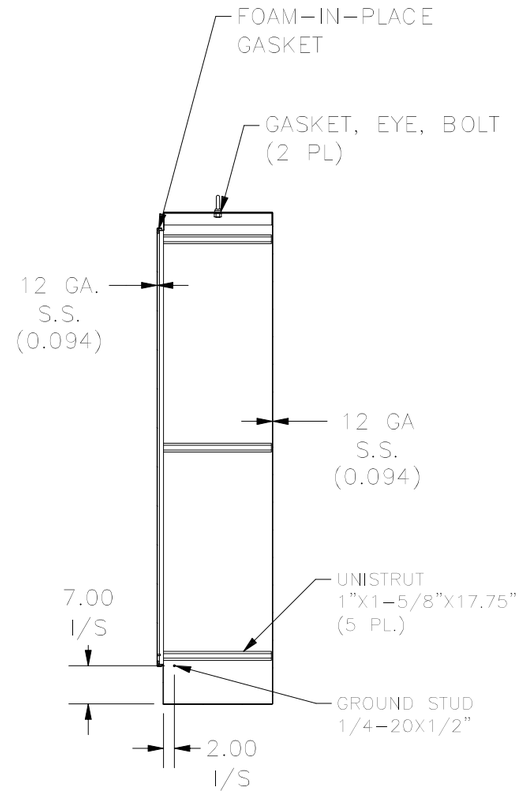

SECTION B-B
(INSIDE LEFT VIEW OF ENCLOSURE)

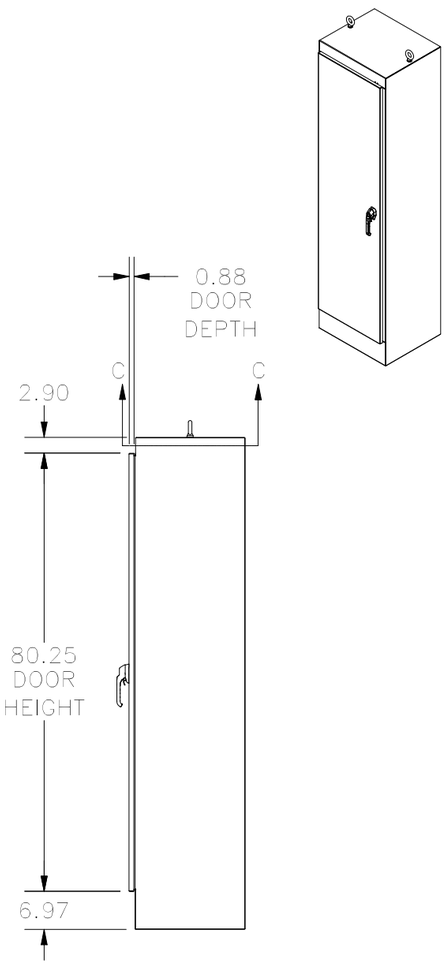

RIGHT SIDE VIEW

PART#: WA902420FSSS
(DATA SUBJECT TO CHANGE WITHOUT NOTICE)

THIS DRAWING IS PROPERTY OF HUBBELL INC.
WIEGMANN
ALL INFORMATION IS PROPRIETARY AND NOT TO BE DUPLICATED

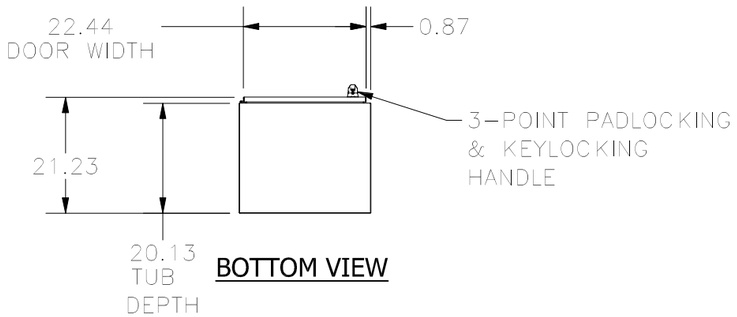

BOTTOM VIEW

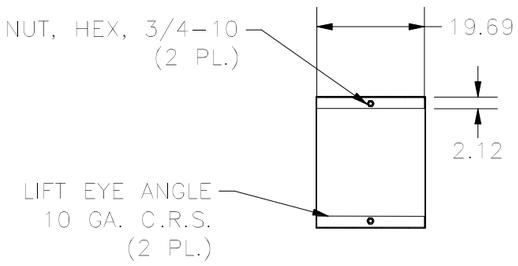

SECTION C-C
(INSIDE VIEW OF ENCLOSURE)