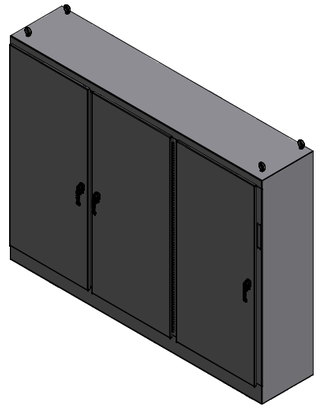

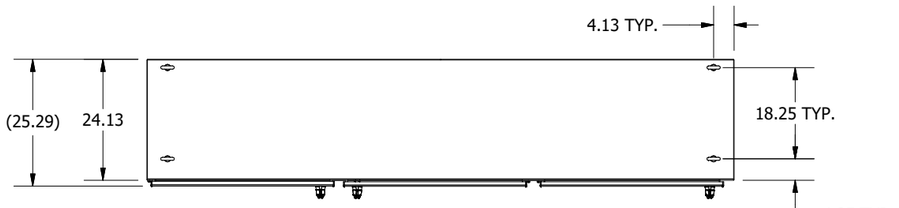

TOP VIEW

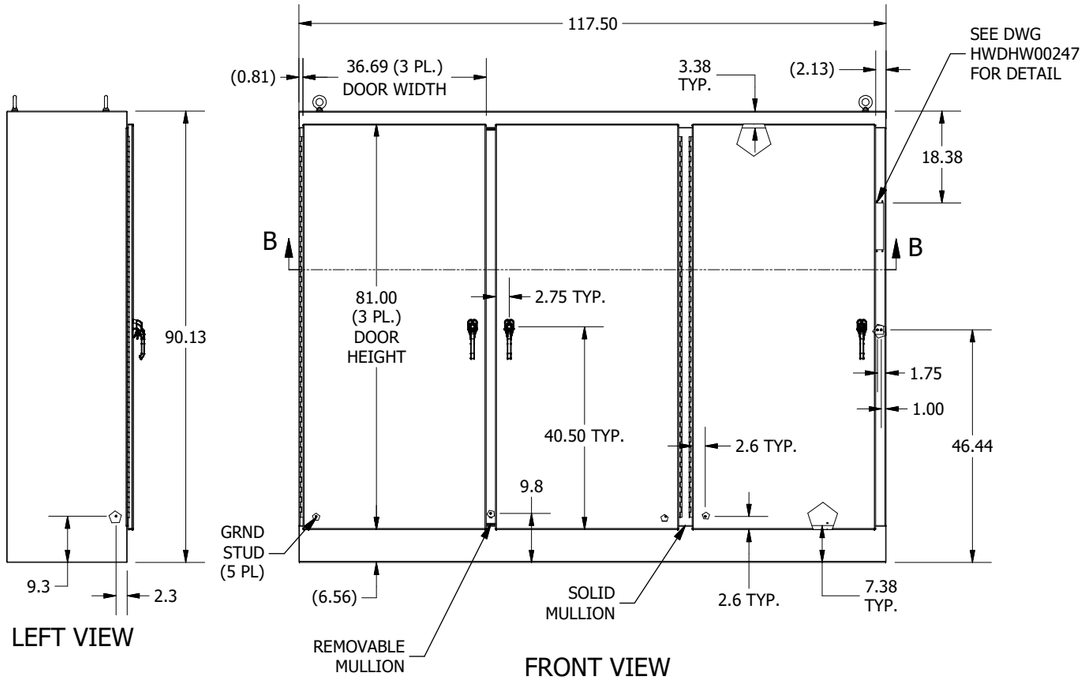

LEFT VIEW

FRONT VIEW

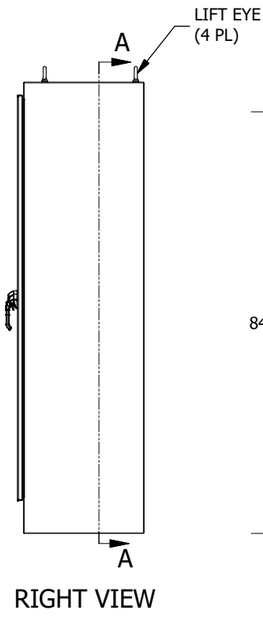

RIGHT VIEW

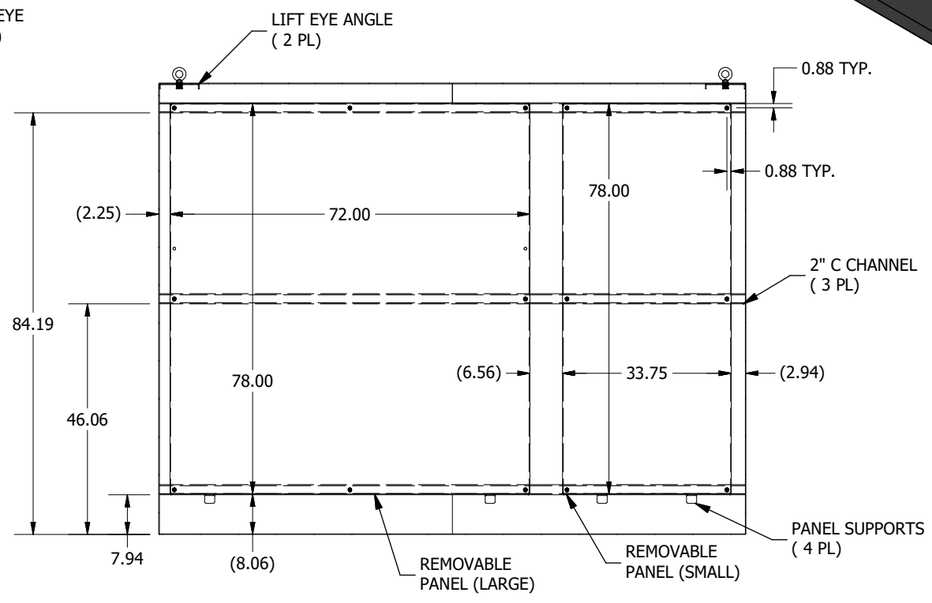

SECTION A-A

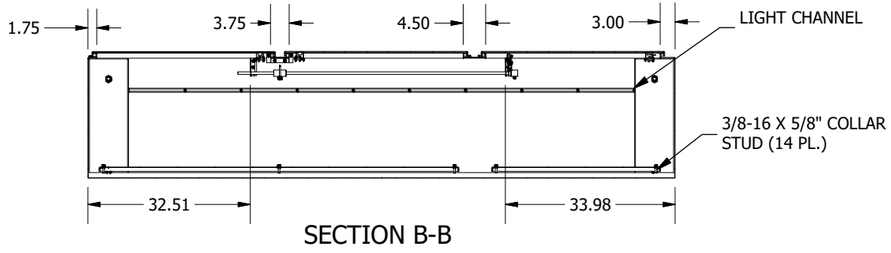

SECTION B-B

PART#: WA90XM3EW24U
(DATA SUBJECT TO CHANGE WITHOUT NOTICE)

THIS DRAWING IS PROPERTY OF HUBBELL INC. WIEGMANN
ALL INFORMATION IS PROPRIETARY AND NOT TO BE DUPLICATED