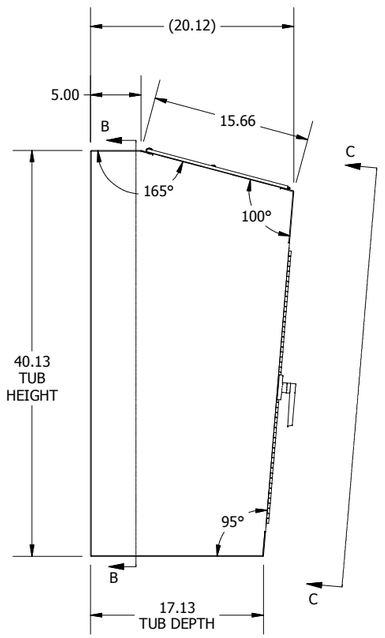

LEFT SIDE VIEW

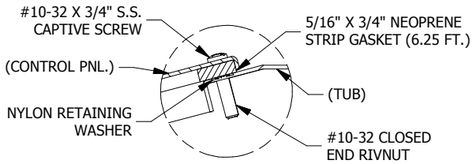

DETAIL A (5 PL.)
(CONTROL PNL. INSTALL DETAIL)

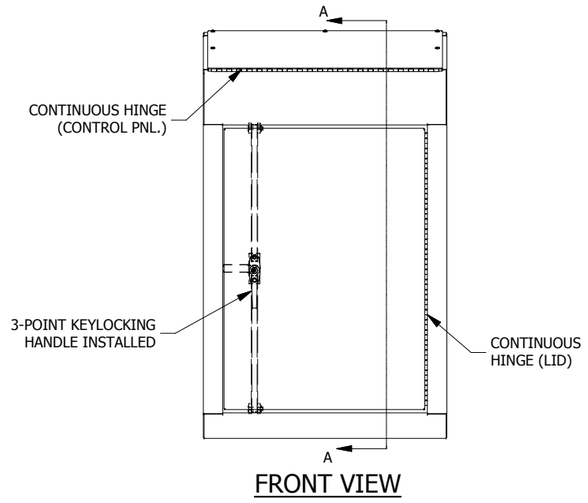

FRONT VIEW

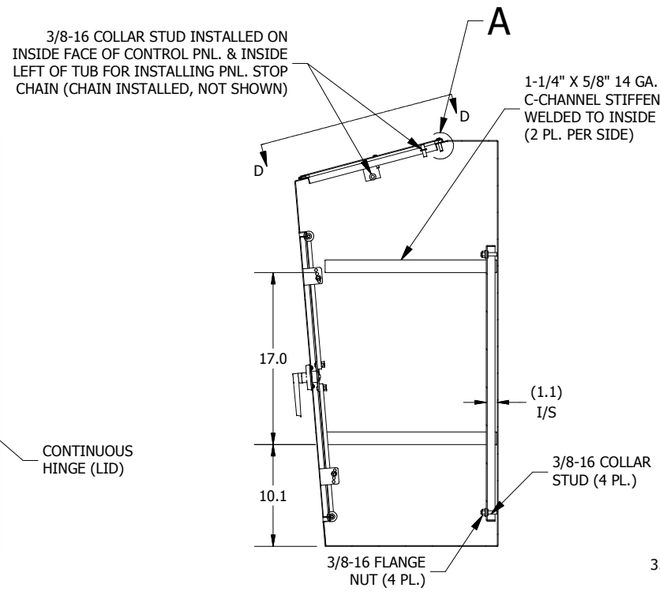

SECTION A-A
(INSIDE LEFT OF ENCL.)

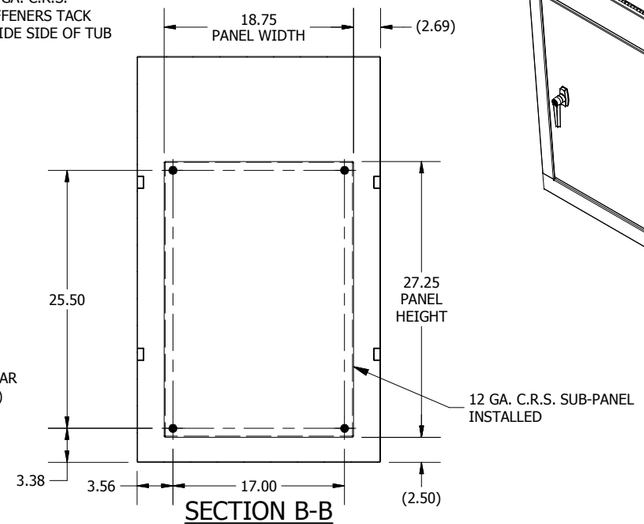

SECTION B-B
(INSIDE BACK OF ENCL.)

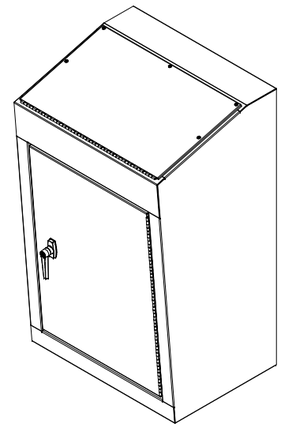

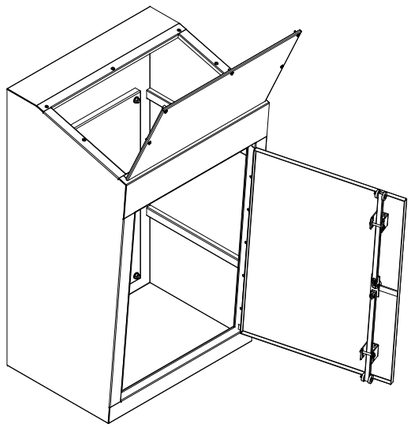

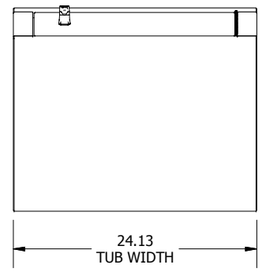

BOTTOM VIEW

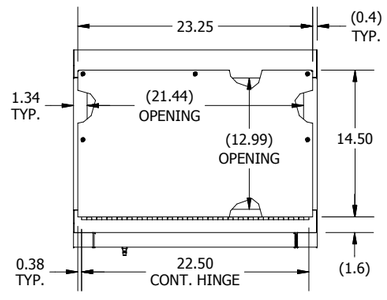

VIEW D-D
(STRAIGHT ON VIEW OF
CONTROL PANEL)

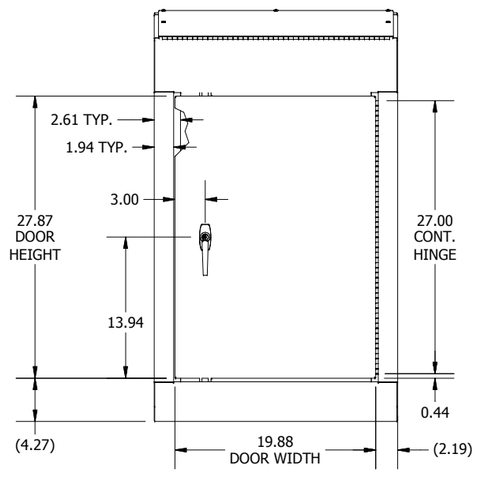

VIEW C-C
(STRAIGHT ON VIEW OF LID)

PART #: WC10B
(DATA SUBJECT TO CHANGE WITHOUT NOTICE)