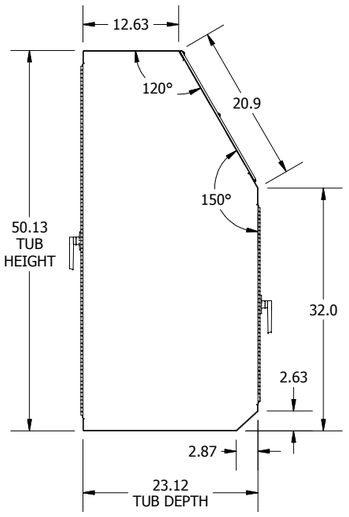

LEFT SIDE VIEW

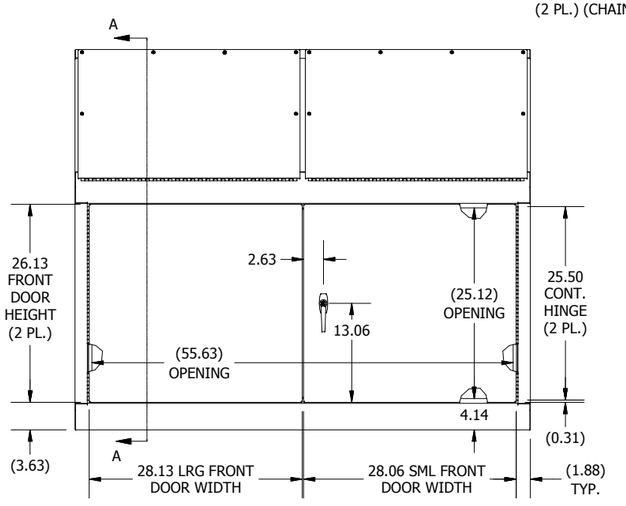

FRONT VIEW

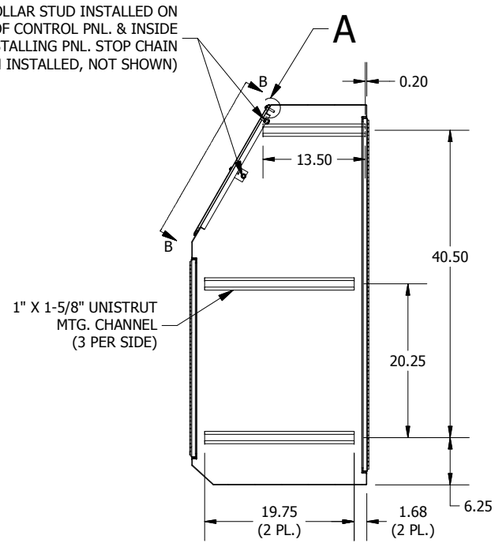

SECTION A-A
(INSIDE LEFT OF ENCL.)

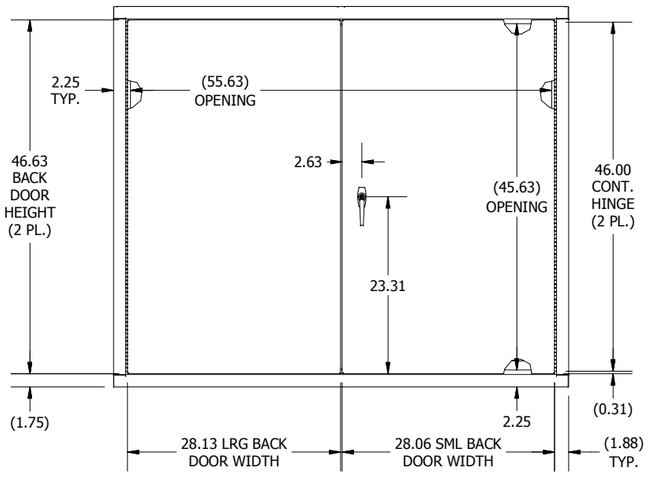

BACK VIEW

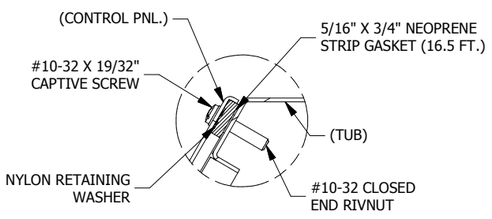

DETAIL A (12 PL.)
(CONTROL PNL. INSTALL DETAIL)

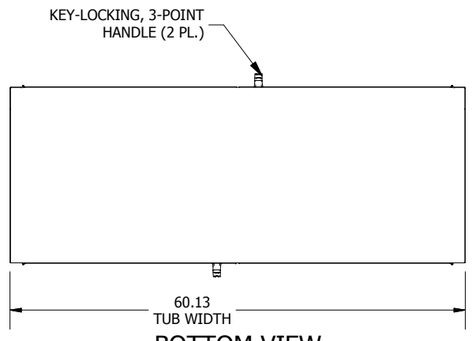

BOTTOM VIEW

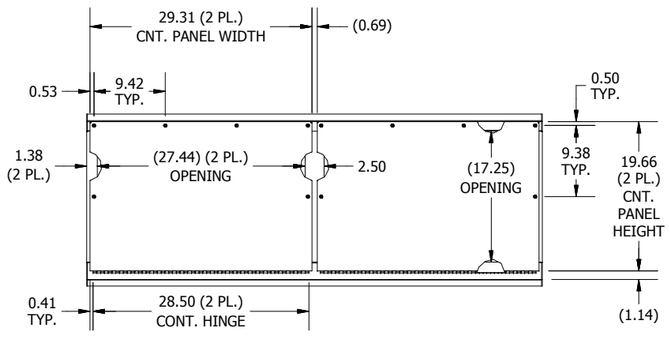

VIEW B-B
(STRAIGHT ON VIEW OF CONTROL PANEL)

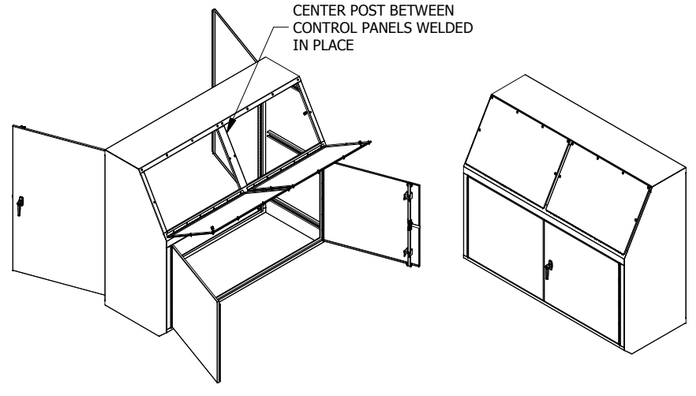

PART#: WC1460BD
(DATA SUBJECT TO CHANGE WITHOUT NOTICE)

THIS DRAWING IS PROPERTY OF HUBBELL INC. WIEGMANN ALL INFORMATION IS PROPRIETARTY AND NOT TO BE DUPLICATED