

TOP VIEW

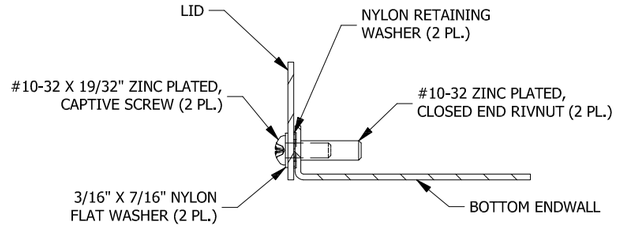

SECTION B-B
(LID ATTACHMENT DETAIL)

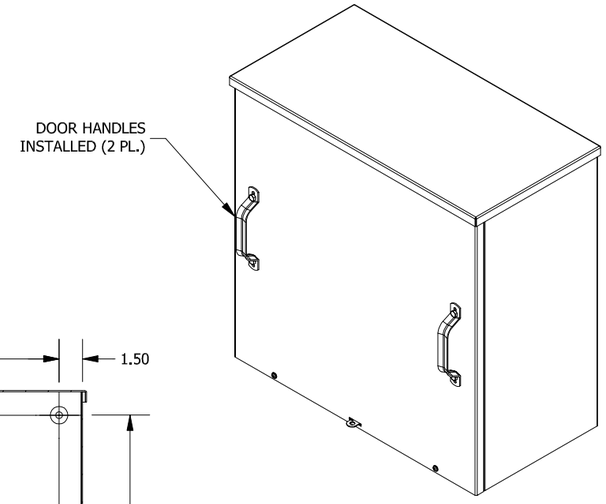

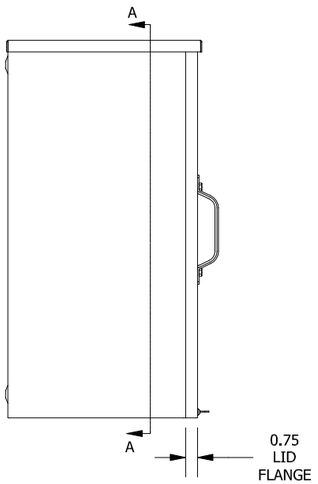

LEFT SIDE VIEW

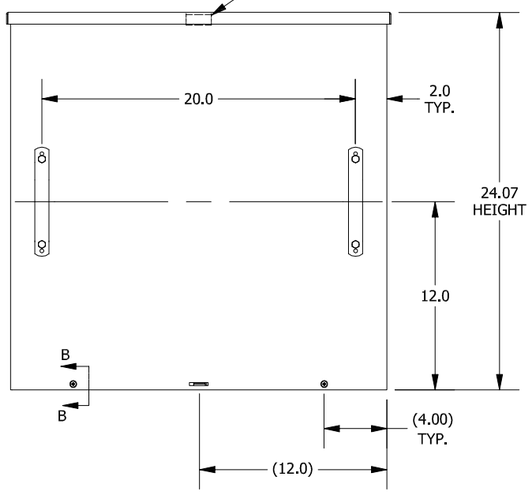

FRONT VIEW

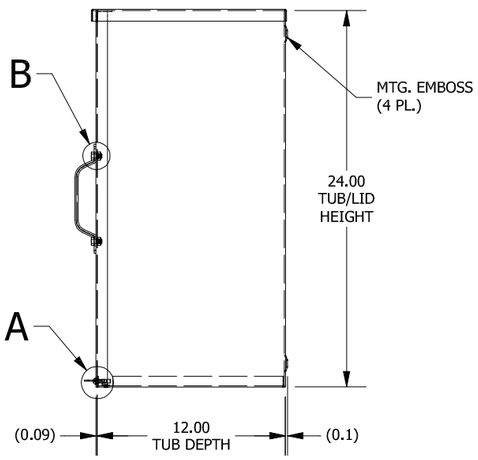

RIGHT SIDE VIEW

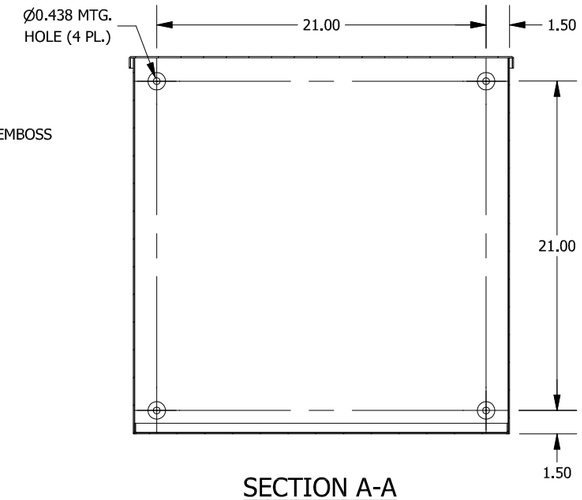

SECTION A-A
(INSIDE BACK OF ENCL.)

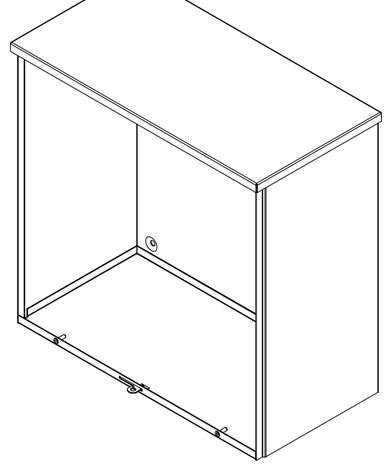

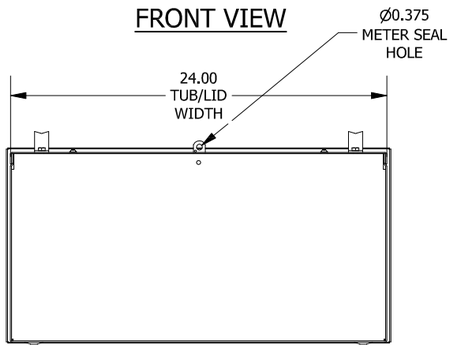

BOTTOM VIEW

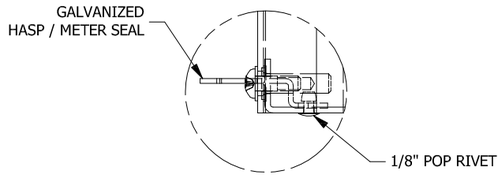

DETAIL A
(METER SEAL DETAIL)

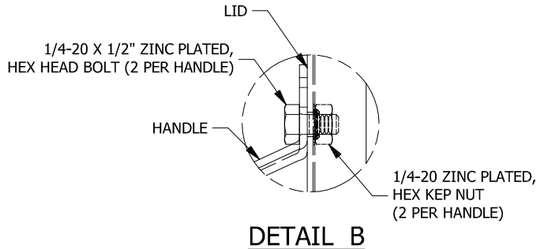

DETAIL B
(HANDLE INSTALL DETAIL)

PART#: WCT242412
(DATA SUBJECT TO CHANGE WITHOUT NOTICE)

THIS DRAWING IS PROPERTY OF HUBBELL INC. WIEGMANN
ALL INFORMATION IS PROPRIETARY AND NOT TO BE DUPLICATED